NOT FOR CONSTRUCTION

LEGEND

VOLUMETRIC BOUNDARY

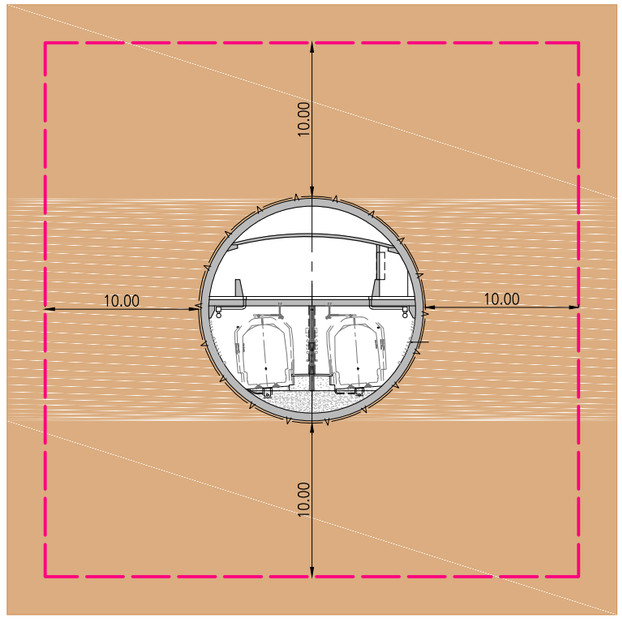

RUNNING TUNNEL

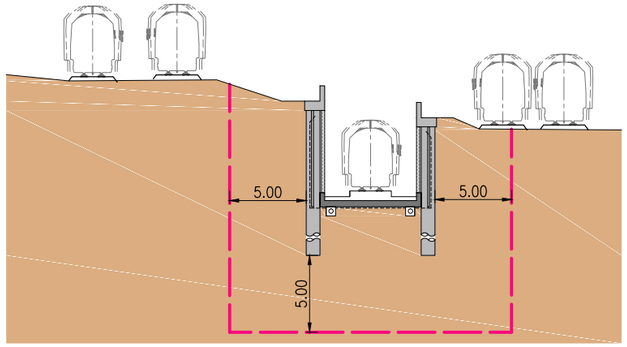

DIVE STRUCTURE

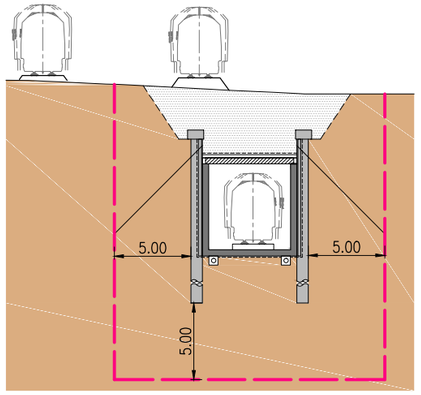

CUT AND COVER TUNNEL

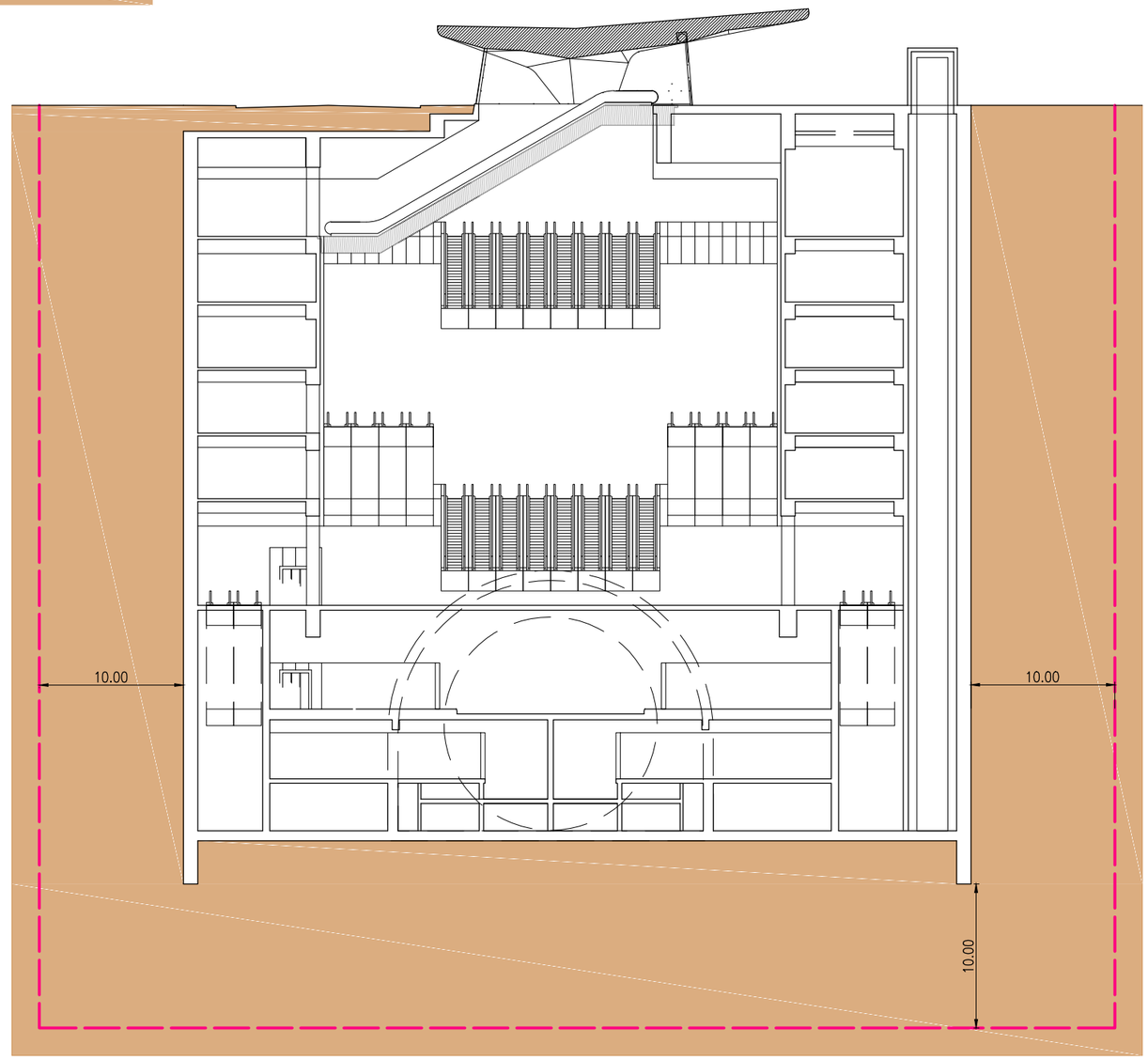

STATION SHAFT

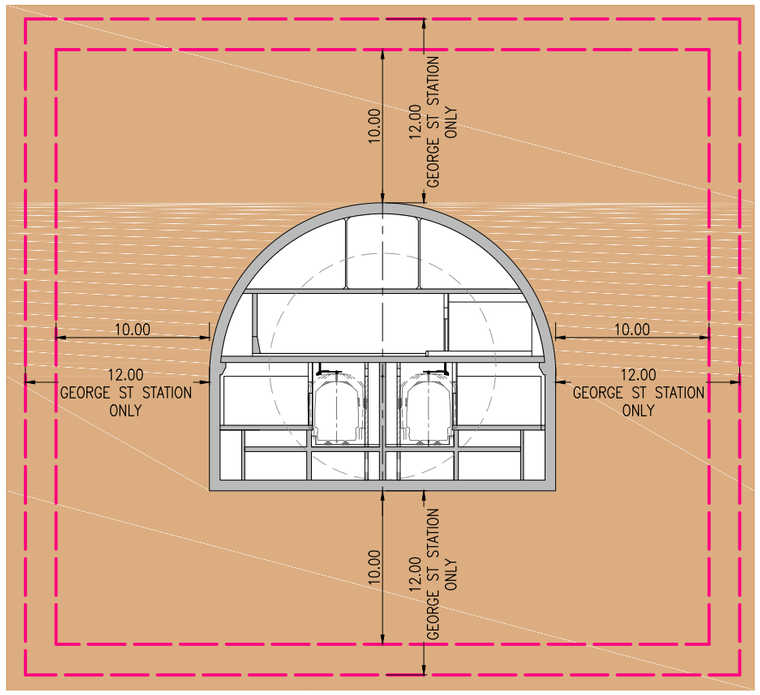

CAVERN SECTION

2	ISSUED FOR EIS		01/08/14	
1	REVISED REFERENCE DESIGN		30/06/14	
0	REFERENCE DESIGN		06/06/14	
	Revisions/Descriptions	Certification	Date	Microfiled

CAD FILES C:\pwworking\aecom_au\quigleym\dms04434\UBAT-B-3-10-00-DG-100301.dwg

Associated Job Nos

Auxiliary Drg Nos

Survey Data: Datum; Horiz. Grid; Height Origin; Survey Books

Scales: SCALE D 0 2 4 6 8 10m — 1 : 400 (A3) 1 : 200 (A1)

Dimensions shown in metres except where shown otherwise

Last Modified :- Jul 31, 2014 - 5:29pm

BRISBANE CITY

BaT (BUS AND TRAIN PROJECT)

REFERENCE DESIGN

Reference Points

Preceding RP	Dist. to start of job (km)	From start to end of job	From end to Following RP	Following RP

Through Chainage from

RAIL AND BUS ALIGNMENT
VOLUMETRIC OFFSETS / PRINCIPALS

Drawn S.W.F

Designed A.D.W

ENGINEERING CERTIFICATION

ENG. AREA	NAME	SIGNATURE	NO.	DATE
LEAD	A.WATT	A.D.W		01/08/14

Queensland Government

Job No.

Contract. No.

Drawing No. 100301 2

Series Number 1 of 1

MRR_Detail (06/13)