Carmichael Coal Mine and Rail Project
Supplementary Environmental Impact Statement

Volume 4, Appendix C3b – Operational Works Excavation and Filling

Containing

- Part 3 – Continued Supporting drawings

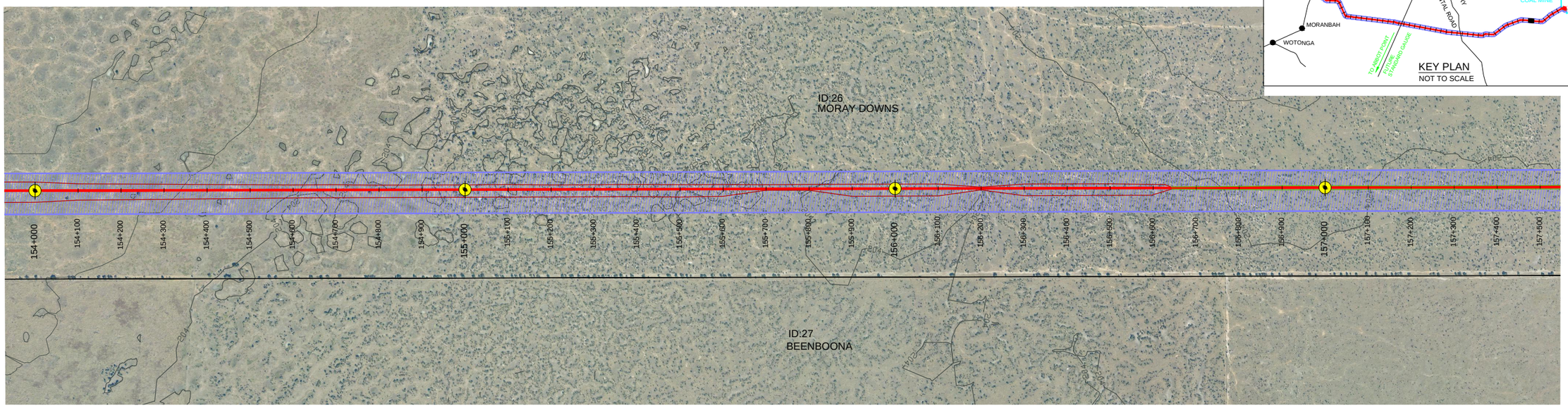

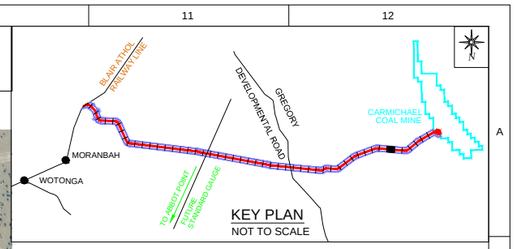

MORANBAH / QRN
SHEET 44

PLAN
1:5000

TO CARMICHAEL
COAL MINE
SHEET 46

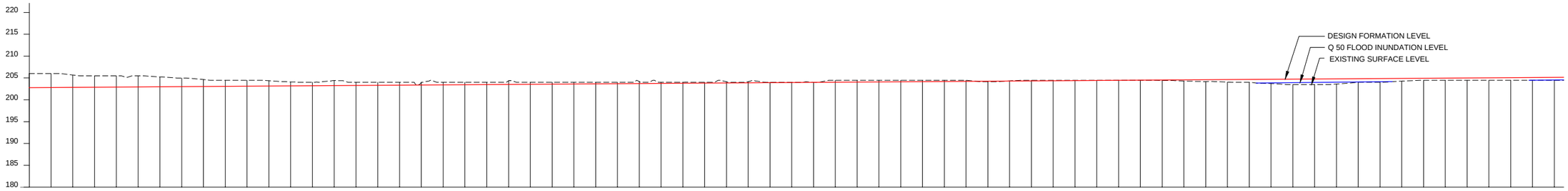

VERTICAL ALIGNMENT: 1:1488

CHAINAGES	DEPTH OF CUTTING(-)	HEIGHT OF BANK(+)	FORMATION LEVELS	SURFACE LEVELS
154+000	3.216		202.784	206.000
154+050	3.182		202.818	206.000
154+100	2.841		202.852	205.693
154+150	2.615		202.885	205.500
154+200	2.581		202.919	205.500
154+250	2.548		202.952	205.500
154+300	2.261		202.986	205.247
154+350	1.980		203.020	205.000
154+400	1.600		203.053	204.653
154+450	1.413		203.087	204.500
154+500	1.380		203.120	204.500
154+550	1.227		203.154	204.381
154+600	0.919		203.188	204.107
154+650	0.779		203.221	204.000
154+700	1.174		203.255	204.429
154+750	0.712		203.288	204.000
154+800	0.678		203.322	204.000
154+850	0.645		203.355	204.000
154+900	0.611		203.389	204.000
154+950	0.577		203.423	204.000
155+000	0.544		203.456	204.000
155+050	0.510		203.490	204.000
155+100	0.823		203.523	204.346
155+150	0.443		203.557	204.000
155+200	0.409		203.591	204.000
155+250	0.376		203.624	204.000
155+300	0.342		203.658	204.000
155+350	0.309		203.691	204.000
155+400	0.479		203.725	204.204
155+450	0.241		203.759	204.000
155+500	0.208		203.792	204.000
155+550	0.174		203.826	204.000
155+600	0.286		203.859	204.145
155+650	0.255		203.893	204.148
155+700	0.073		203.927	204.000
155+750	0.040		203.960	204.000
155+800	0.035		203.994	204.029
155+850	0.473		204.027	204.500
155+900	0.439		204.061	204.500
155+950	0.405		204.095	204.500
156+000	0.372		204.128	204.500
156+050	0.338		204.162	204.500
156+100	0.305		204.195	204.500
156+150	0.271		204.229	204.500
156+200		0.122	204.263	204.141
156+250	0.045		204.296	204.341
156+300	0.170		204.330	204.500
156+350	0.137		204.363	204.500
156+400	0.103		204.397	204.500
156+450	0.069		204.431	204.500
156+500	0.036		204.464	204.500
156+550	0.002		204.498	204.500
156+600		0.098	204.531	204.433
156+650		0.259	204.565	204.306
156+700		0.400	204.599	204.199
156+750		0.574	204.632	204.058
156+800		0.666	204.666	204.000
156+850		0.958	204.699	203.741
156+900		1.210	204.733	203.523
156+950		1.266	204.766	203.500
157+000		1.178	204.800	203.622
157+050		0.836	204.834	203.998
157+100		0.867	204.867	204.000
157+150		0.609	204.901	204.292
157+200		0.434	204.934	204.500
157+250		0.468	204.968	204.500
157+300		0.502	205.002	204.500
157+350		0.535	205.035	204.500
157+400		0.569	205.069	204.500
157+450		0.602	205.102	204.500
157+500		0.636	205.136	204.500

HORIZONTAL ALIGNMENT: L = 12094.05m

LONGITUDINAL PROFILE ALONG RAIL FORMATION CENTRE LINE
HORIZONTAL-1:5000, VERTICAL-1:500

HORIZONTAL 1:5000 — 0 50 100 150 200 Metres
VERTICAL 1:500 — 0 5 10 15 20 Metres

ISSUED FOR USE
NOT FOR CONSTRUCTION

REV	BY	DATE	DESCRIPTION	CKD	APP
0	VS	18/12/12	ISSUED FOR USE	CW	RB

LEGEND:-
- KILOMETRE POST
- START OF PASSING LOOP
- END OF PASSING LOOP
- PROPERTY BOUNDARY
- PROPOSED ALIGNMENT (OPTION-11 REV-2)
- EXISTING RAILWAY LINE
- OCCUPATIONAL CROSSING (OC) AT GRADE
- OCCUPATIONAL CROSSING (OC) UNDER PASS
- ROAD CROSSING (AT GRADE)
- ROAD CROSSING (RAIL OVER ROAD)
- ROAD CROSSING (ROAD OVER RAIL)
- DRAINAGE STRUCTURE (DS) (INDICATIVE ONLY)
- RAILWAY BRIDGE
- WATER COURSE
- RAILWAY CORRIDOR
- EMBANKMENT TOE
- CUTTING TOE
- STREAM DIVERSION
- FUTURE PIPE LINE
- EXISTING SERVICES

DRAWN	V SURESH	18/12/12
DRAFTING CHECK	A S SUBRAHMANYAM	18/12/12
ENG. APPROVED	AN KESKAR	18/12/12
PROJECT MANAGER	RICHARD BROMILOW	18/12/12
RPEQ APPROVAL SIGNED:	CHRIS WARNOCK	
NAME:	CHRIS WARNOCK	18/12/12
RPEQ No:	03423	

calibre
Calibre Operations Pty. Ltd.
Ground Floor, 545 Queen St
Brisbane QLD 4000
Australia
Tel: +61 (0)7 3001 6000
Fax: +61 (0)7 3001 6050

aarvee associates
Aarvee Associates Pty. Ltd.
Suite 39, Level 22, 69 Ann St
Brisbane QLD 4000
Australia
Tel: +61 (0)7 3112 5297
Fax: +61 (0)7 3112 5101

adani

THIS DRAWING CONTAINS CONFIDENTIAL INFORMATION TO CALIBRE OPERATIONS PTY. LTD. & ITS AFFILIATED PARTIES. THE CLIENT HAS THE RIGHT TO USE THE INFORMATION CONTAINED IN THIS DRAWING PURSUANT TO CONTRACT BETWEEN CLIENT AND CALIBRE OPERATIONS PTY. LTD.

ORIGINAL SIZE A1

CARMICHAEL COAL MINE AND RAIL PROJECT
ADANI CLIENT'S ENGINEER - RAIL
CIVIL - EARTHWORKS
PLAN AND PROFILE - CH 154.0 - CH 157.5 - SHEET 45

MASTER COPY

PROJECT No. CARP12033
DRG No. CARP12033-1000-DWG-Y-145
REV 0

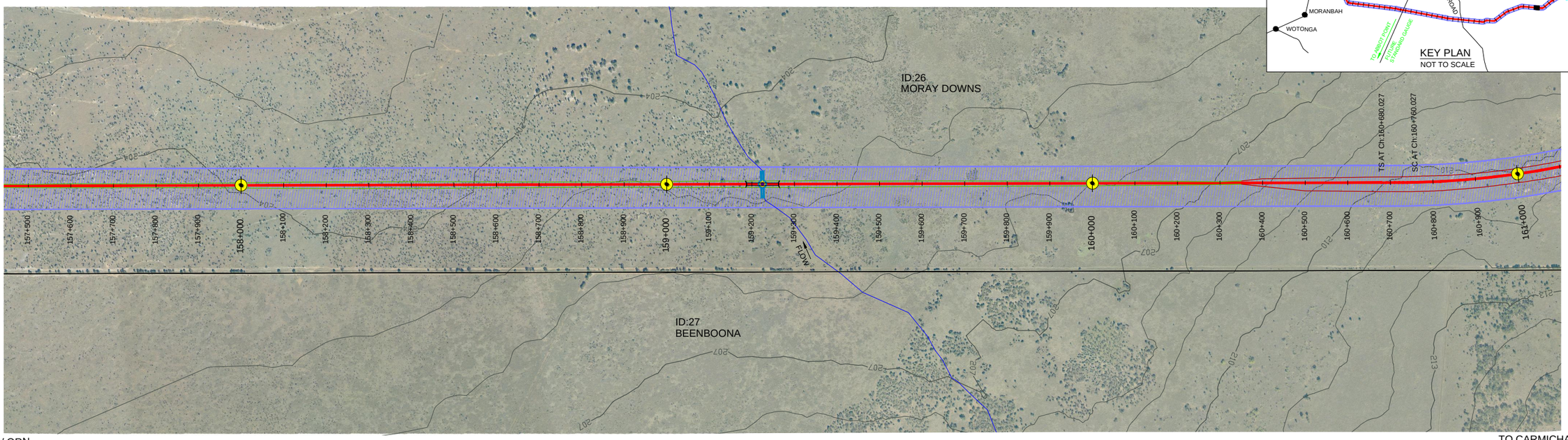

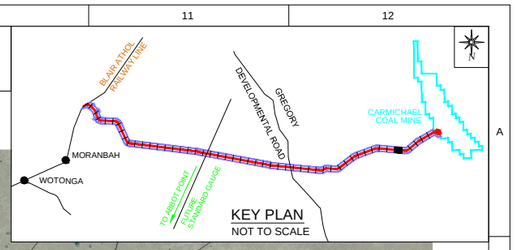

MORANBAH / QRN
SHEET 45

PLAN
1:5000

TO CARMICHAEL
COAL MINE
SHEET 47

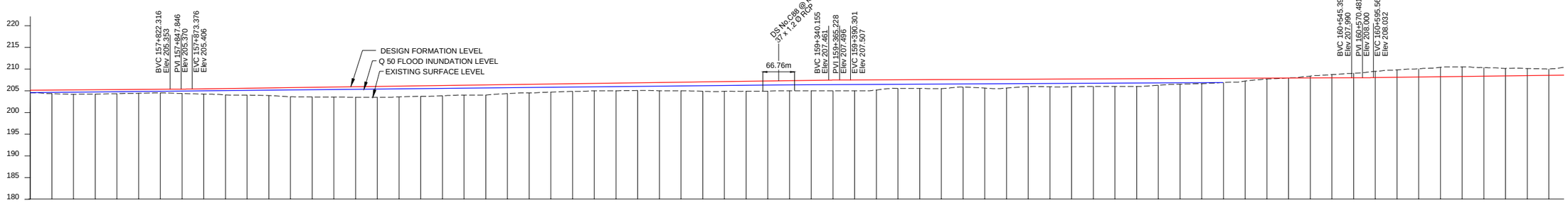

VERTICAL ALIGNMENT: 1:1488 | K700 | 1:714 | K510 | 1:2392 | K580 | 1:779

DEPTH OF CUTTING(-): 0.063 0.440 0.753 1.057 1.462 1.715 1.891 2.189 2.206 1.969 1.727 1.638 1.471

HEIGHT OF BANK(+): 0.636 0.842 1.018 1.007 0.950 0.893 0.838 0.995 1.213 1.448 1.583 1.768 2.095 2.225 2.331 2.433 2.503 2.479 2.438 2.361 2.284 2.330 2.082 1.994 1.869 1.786 1.704 1.774 1.796 1.914 1.984 2.176 2.253 2.307 2.344 2.335 2.405 2.474 2.511 2.352 2.001 2.049 2.094 1.782 1.998 2.032 1.712 1.786 1.808 1.741 1.761 1.782 1.535 1.324 1.223 0.979 0.629 0.199

FORMATION LEVELS: 205.136 205.170 205.203 205.237 205.270 205.304 205.338 205.377 205.443 205.513 205.583 205.653 205.723 205.793 205.863 205.933 206.003 206.073 206.144 206.214 206.284 206.354 206.424 206.494 206.564 206.634 206.704 206.774 206.844 206.914 206.984 207.054 207.124 207.195 207.265 207.335 207.405 207.474 207.511 207.532 207.552 207.573 207.594 207.615 207.636 207.657 207.678 207.699 207.720 207.741 207.761 207.782 207.803 207.824 207.845 207.866 207.887 207.908 207.929 207.950 207.971 207.992 208.038 208.102 208.166 208.230 208.294 208.359 208.423 208.487 208.551

SURFACE LEVELS: 204.500 204.328 204.185 204.230 204.320 204.411 204.500 204.382 204.230 204.065 204.000 203.885 203.628 203.568 203.532 203.500 203.500 203.594 203.706 203.853 204.000 204.024 204.342 204.500 204.695 204.848 205.000 205.000 205.048 205.000 205.000 204.878 204.871 204.888 204.921 205.000 205.000 205.000 205.000 205.180 205.551 205.524 205.500 205.833 205.638 205.625 205.966 205.913 205.912 206.000 206.000 206.000 206.268 206.500 206.622 206.887 207.258 207.709 207.992 208.390 208.724 209.049 209.500 209.817 210.057 210.419 210.500 210.328 210.150 210.125 210.022

HORIZONTAL ALIGNMENT: L = 12094.05m | Tr= 80.00m | R =-2000m

CHAINAGES: 157+500 157+550 157+600 157+650 157+700 157+750 157+800 157+850 157+900 157+950 158+000 158+050 158+100 158+150 158+200 158+250 158+300 158+350 158+400 158+450 158+500 158+550 158+600 158+650 158+700 158+750 158+800 158+850 158+900 158+950 159+000 159+050 159+100 159+150 159+200 159+250 159+300 159+350 159+400 159+450 159+500 159+550 159+600 159+650 159+700 159+750 159+800 159+850 159+900 159+950 160+000 160+050 160+100 160+150 160+200 160+250 160+300 160+350 160+400 160+450 160+500 160+550 160+600 160+650 160+700 160+750 160+800 160+850 160+900 160+950 161+000

LONGITUDINAL PROFILE ALONG RAIL FORMATION CENTRE LINE
HORIZONTAL-1:5000, VERTICAL-1:500

HORIZONTAL 1:5000 — 0 50 100 150 200 Metres
VERTICAL 1:500 — 0 5 10 15 20 Metres

ISSUED FOR USE
NOT FOR CONSTRUCTION

REV	BY	DATE	DESCRIPTION	CKD	APP
0	VS	18/12/12	ISSUED FOR USE	CW	RB

REVISIONS

LEGEND:-
- KILOMETRE POST
- START OF PASSING LOOP
- END OF PASSING LOOP
- PROPERTY BOUNDARY
- PROPOSED ALIGNMENT (OPTION-11 REV-2)
- EXISTING RAILWAY LINE
- OCCUPATIONAL CROSSING (OC) AT GRADE
- OCCUPATIONAL CROSSING (OC) UNDER PASS
- ROAD CROSSING (AT GRADE)
- ROAD CROSSING (RAIL OVER ROAD)
- ROAD CROSSING (ROAD OVER RAIL)
- DRAINAGE STRUCTURE (DS) (INDICATIVE ONLY)
- RAILWAY BRIDGE
- WATER COURSE
- RAILWAY CORRIDOR
- EMBANKMENT TOE
- CUTTING TOE
- STREAM DIVERSION
- FUTURE PIPE LINE
- EXISTING SERVICES

DRAWN	V SURESH	18/12/12
DRAFTING CHECK	A S SUBRAHMANYAM	18/12/12
ENG. APPROVED	AN KESKAR	18/12/12
PROJECT MANAGER	RICHARD BROMILOW	18/12/12
RPEQ APPROVAL SIGNED:	CHRIS WARNOCK	
NAME:	CHRIS WARNOCK	18/12/12
RPEQ No:	03423	

calibre
Calibre Operations Pty. Ltd.
Ground Floor, 545 Queen St
Brisbane QLD 4000
Australia
Tel: +61 (0)7 3001 6000
Fax: +61 (0)7 3001 6050

aarvee associates
Aarvee Associates Pty. Ltd.
Suite 39, Level 22, 69 Ann St
Brisbane QLD 4000
Australia
Tel: +61 (0)7 3112 5297
Fax: +61 (0)7 3112 5101

adani

THIS DRAWING CONTAINS CONFIDENTIAL INFORMATION TO CALIBRE OPERATIONS PTY. LTD. & ITS AFFILIATED PARTIES. THE CLIENT HAS THE RIGHT TO USE THE INFORMATION CONTAINED IN THIS DRAWING PURSUANT TO CONTRACT BETWEEN CLIENT AND CALIBRE OPERATIONS PTY. LTD.

ORIGINAL SIZE A1

CARMICHAEL COAL MINE AND RAIL PROJECT
ADANI CLIENT'S ENGINEER - RAIL
CIVIL - EARTHWORKS
PLAN AND PROFILE - CH 157.5 - CH 161.0 - SHEET 46

MASTER COPY

PROJECT No. CARP12033
DRG No. CARP12033-1000-DWG-Y-146
REV 0

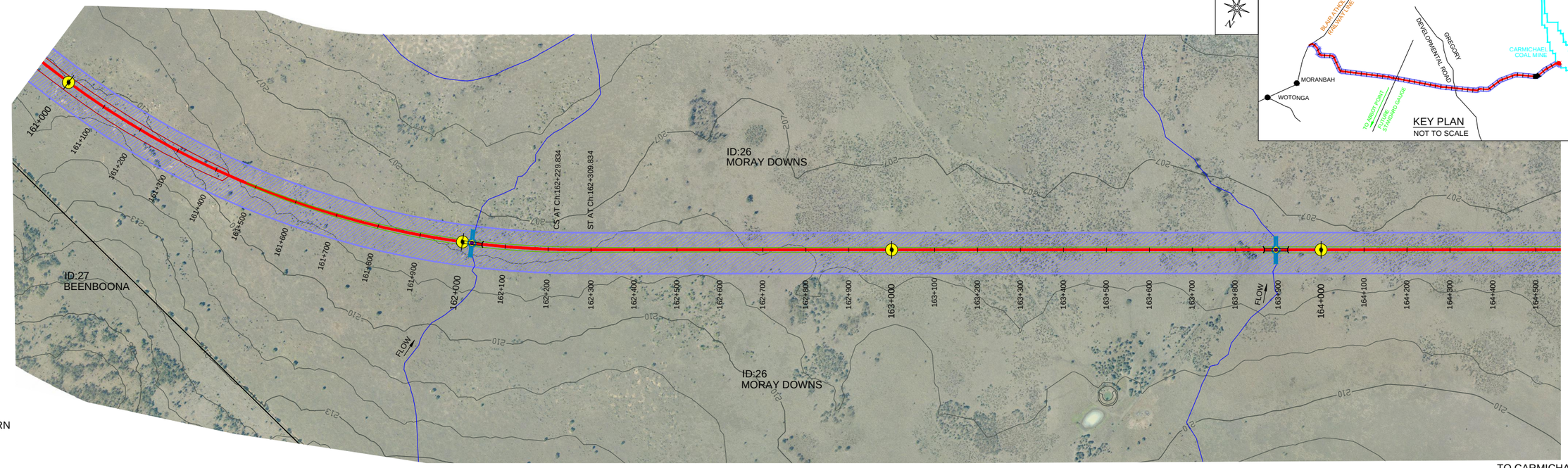

PLAN

1:5000

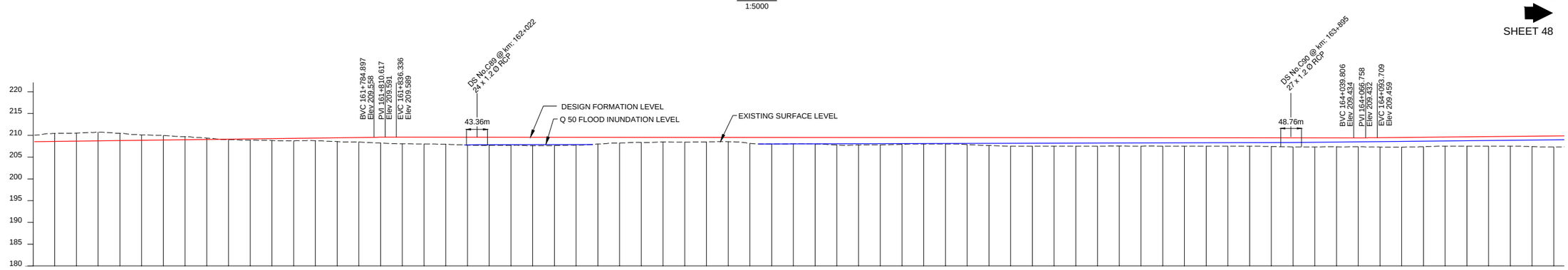

VERTICAL ALIGNMENT: 1:779 | K380 | 1:-14150 | K500 | 1:993

CHAINAGES	DEPTH OF CUTTING(-)	HEIGHT OF BANK(+)	FORMATION LEVELS	SURFACE LEVELS
161+000	1.471		208.551	210.022
161+050	1.813		208.615	210.428
161+100	1.849		208.679	210.528
161+150	2.006		208.744	210.750
161+200	1.692		208.808	210.500
161+250	1.238		208.872	210.110
161+300	1.058		208.936	209.994
161+350	0.711		209.000	209.711
161+400	0.313		209.064	209.377
161+450		0.112	209.128	209.016
161+500		0.272	209.193	208.921
161+550		0.425	209.257	208.832
161+600		0.566	209.321	208.755
161+650		0.598	209.385	208.787
161+700		0.874	209.449	208.575
161+750		1.034	209.513	208.479
161+800		1.322	209.574	208.252
161+850		1.538	209.588	208.050
161+900		1.585	209.585	208.000
161+950		1.623	209.581	207.958
162+000		1.793	209.578	207.785
162+050		1.865	209.574	207.709
162+100		1.866	209.571	207.705
162+150		1.927	209.567	207.640
162+200		1.909	209.564	207.655
162+250		1.816	209.560	207.744
162+300		1.556	209.556	208.000
162+350		1.306	209.553	208.247
162+400		1.171	209.549	208.378
162+450		1.074	209.546	208.472
162+500		1.110	209.542	208.432
162+550		1.035	209.539	208.504
162+600		0.994	209.535	208.541
162+650		1.370	209.532	208.162
162+700		1.528	209.528	208.000
162+750		1.461	209.525	208.064
162+800		1.511	209.521	208.010
162+850		1.731	209.518	207.787
162+900		1.729	209.514	207.785
162+950		1.687	209.511	207.824
163+000		1.573	209.507	207.934
163+050		1.503	209.503	208.000
163+100		1.500	209.500	208.000
163+150		1.611	209.496	207.885
163+200		1.816	209.493	207.677
163+250		1.989	209.489	207.500
163+300		1.986	209.486	207.500
163+350		1.982	209.482	207.500
163+400		1.979	209.479	207.500
163+450		1.975	209.475	207.500
163+500		1.927	209.472	207.545
163+550		1.968	209.468	207.500
163+600		1.965	209.465	207.500
163+650		1.961	209.461	207.500
163+700		1.958	209.458	207.500
163+750		1.954	209.454	207.500
163+800		1.950	209.450	207.500
163+850		2.008	209.447	207.439
163+900		2.089	209.443	207.354
163+950		2.104	209.440	207.336
164+000		2.068	209.436	207.368
164+050		2.048	209.434	207.386
164+100		2.157	209.465	207.308
164+150		2.208	209.515	207.307
164+200		2.173	209.566	207.393
164+250		2.116	209.616	207.500
164+300		2.167	209.667	207.500
164+350		2.217	209.717	207.500
164+400		2.267	209.767	207.500
164+450		2.408	209.818	207.410
164+500		2.539	209.868	207.329

HORIZONTAL ALIGNMENT: R =-2000m | Tr= 80.00m | L = 6498.30m

LONGITUDINAL PROFILE ALONG RAIL FORMATION CENTRE LINE

HORIZONTAL-1:5000, VERTICAL-1:500

HORIZONTAL 1:5000 — 0 50 100 150 200 Metres

VERTICAL 1:500 — 0 5 10 15 20 Metres

ISSUED FOR USE
NOT FOR CONSTRUCTION

REV	BY	DATE	DESCRIPTION	CKD	APP
0	VS	18/12/12	ISSUED FOR USE	CW	RB

REVISIONS

LEGEND:-
- KILOMETRE POST
- START OF PASSING LOOP
- END OF PASSING LOOP
- PROPERTY BOUNDARY
- PROPOSED ALIGNMENT (OPTION-11 REV-2)
- EXISTING RAILWAY LINE
- OCCUPATIONAL CROSSING (OC) AT GRADE
- OCCUPATIONAL CROSSING (OC) UNDER PASS
- ROAD CROSSING (AT GRADE)
- ROAD CROSSING (RAIL OVER ROAD)
- ROAD CROSSING (ROAD OVER RAIL)
- DRAINAGE STRUCTURE (DS) (INDICATIVE ONLY)
- RAILWAY BRIDGE
- WATER COURSE
- RAILWAY CORRIDOR
- EMBANKMENT TOE
- CUTTING TOE
- STREAM DIVERSION
- FUTURE PIPE LINE
- EXISTING SERVICES

DRAWN	V SURESH	18/12/12
DRAFTING CHECK	A S SUBRAHMANYAM	18/12/12
ENG. APPROVED	AN KESKAR	18/12/12
PROJECT MANAGER	RICHARD BROMILOW	18/12/12
RPEQ APPROVAL SIGNED:	CHRIS WARNOCK	
NAME:	CHRIS WARNOCK	18/12/12
RPEQ No:	03423	

calibre
Calibre Operations Pty. Ltd.
Ground Floor, 545 Queen St
Brisbane QLD 4000
Australia
Tel: +61 (0)7 3001 6000
Fax: +61 (0)7 3001 6050

aarvee associates
Aarvee Associates Pty. Ltd.
Suite 39, Level 22, 69 Ann St
Brisbane QLD 4000
Australia
Tel: +61 (0)7 3112 5297
Fax: +61 (0)7 3112 5101

adani

THIS DRAWING CONTAINS CONFIDENTIAL INFORMATION TO CALIBRE OPERATIONS PTY. LTD. & ITS AFFILIATED PARTIES. THE CLIENT HAS THE RIGHT TO USE THE INFORMATION CONTAINED IN THIS DRAWING PURSUANT TO CONTRACT BETWEEN CLIENT AND CALIBRE OPERATIONS PTY. LTD.

ORIGINAL SIZE A1

CARMICHAEL COAL MINE AND RAIL PROJECT
ADANI CLIENT'S ENGINEER - RAIL
CIVIL - EARTHWORKS
PLAN AND PROFILE - CH 161.0 - CH 164.5 - SHEET 47

MASTER COPY

PROJECT No. CARP12033

DRG No. CARP12033-1000-DWG-Y-147 REV 0

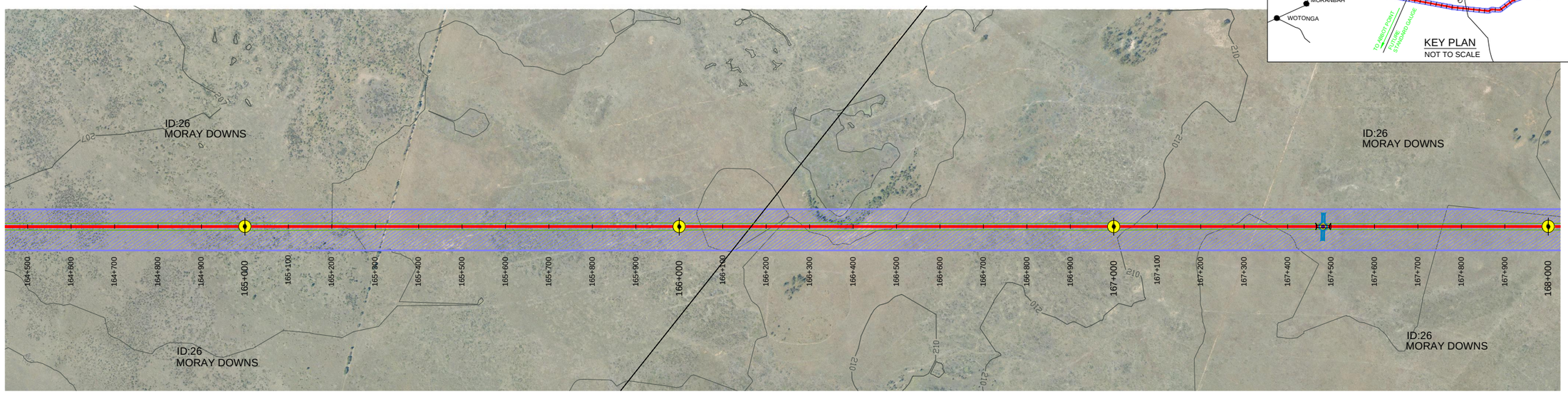

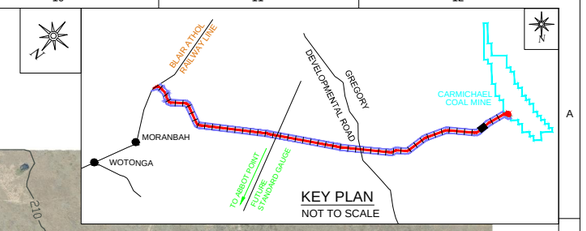

MORANBAH / QRN
SHEET 47

PLAN
1:5000

TO CARMICHAEL
COAL MINE
SHEET 49

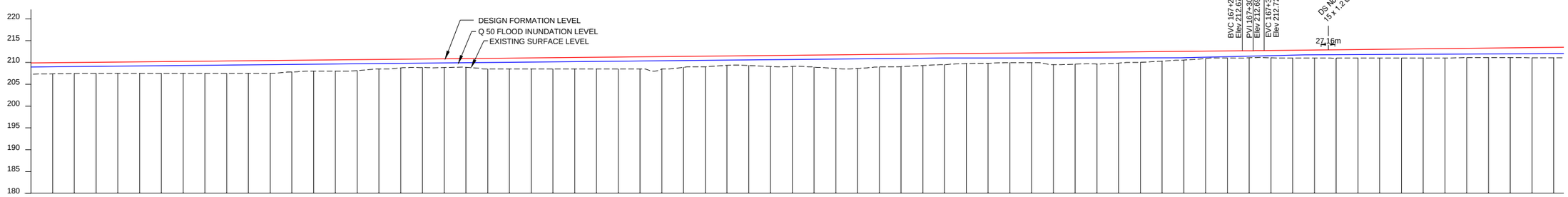

VERTICAL ALIGNMENT: 1:993 | K5670 | 1:913

DEPTH OF CUTTING(-)

CHAINAGES	HEIGHT OF BANK(+)	FORMATION LEVELS	SURFACE LEVELS
164+500	2.539	209.868	207.329
164+550	2.536	209.918	207.382
164+600	2.515	209.969	207.454
164+650	2.519	210.019	207.500
164+700	2.570	210.070	207.500
164+750	2.620	210.120	207.500
164+800	2.670	210.170	207.500
164+850	2.721	210.221	207.500
164+900	2.771	210.271	207.500
164+950	2.821	210.321	207.500
165+000	2.872	210.372	207.500
165+050	2.915	210.422	207.507
165+100	2.658	210.473	207.815
165+150	2.523	210.523	208.000
165+200	2.573	210.573	208.000
165+250	2.484	210.624	208.140
165+300	2.174	210.674	208.500
165+350	1.970	210.724	208.754
165+400	1.940	210.775	208.835
165+450	1.994	210.825	208.831
165+500	1.984	210.875	208.891
165+550	2.426	210.926	208.500
165+600	2.476	210.976	208.500
165+650	2.527	211.027	208.500
165+700	2.577	211.077	208.500
165+750	2.627	211.127	208.500
165+800	2.678	211.178	208.500
165+850	2.728	211.228	208.500
165+900	2.778	211.278	208.500
165+950	2.829	211.329	208.500
166+000	2.497	211.379	208.882
166+050	2.430	211.430	209.000
166+100	2.156	211.480	209.324
166+150	2.231	211.530	209.299
166+200	2.512	211.581	209.069
166+250	2.556	211.631	209.075
166+300	2.748	211.681	208.933
166+350	3.111	211.732	208.621
166+400	3.176	211.782	208.606
166+450	2.873	211.832	208.959
166+500	2.843	211.883	209.040
166+550	2.645	211.933	209.288
166+600	2.484	211.984	209.500
166+650	2.296	212.034	209.738
166+700	2.276	212.084	209.808
166+750	2.171	212.135	209.964
166+800	2.226	212.185	209.959
166+850	2.735	212.235	209.500
166+900	2.681	212.286	209.605
166+950	2.703	212.336	209.633
167+000	2.543	212.387	209.844
167+050	2.403	212.437	210.034
167+100	2.198	212.487	210.289
167+150	2.014	212.538	210.524
167+200	1.683	212.588	210.905
167+250	1.638	212.638	211.000
167+300	1.620	212.689	211.069
167+350	1.685	212.743	211.058
167+400	1.798	212.798	211.000
167+450	1.852	212.852	211.000
167+500	1.910	212.907	210.997
167+550	1.962	212.962	211.000
167+600	2.017	213.017	211.000
167+650	2.071	213.071	211.000
167+700	2.126	213.126	211.000
167+750	2.181	213.181	211.000
167+800	2.128	213.236	211.108
167+850	2.181	213.291	211.110
167+900	2.249	213.345	211.096
167+950	2.317	213.400	211.083
168+000	2.386	213.455	211.069

HORIZONTAL ALIGNMENT: L = 6498.30m

LONGITUDINAL PROFILE ALONG RAIL FORMATION CENTRE LINE
HORIZONTAL-1:5000, VERTICAL-1:500

HORIZONTAL 1:5000 — 0 50 100 150 200 Metres
VERTICAL 1:500 — 0 5 10 15 20 Metres

ISSUED FOR USE
NOT FOR CONSTRUCTION

REVISIONS

REV	BY	DATE	DESCRIPTION	CKD	APP
0	VS	18/12/12	ISSUED FOR USE	CW	RB

LEGEND:-
- KILOMETRE POST
- START OF PASSING LOOP
- END OF PASSING LOOP
- PROPERTY BOUNDARY
- PROPOSED ALIGNMENT (OPTION-11 REV-2)
- EXISTING RAILWAY LINE
- OCCUPATIONAL CROSSING (OC) AT GRADE
- OCCUPATIONAL CROSSING (OC) UNDER PASS
- ROAD CROSSING (AT GRADE)
- ROAD CROSSING (RAIL OVER ROAD)
- ROAD CROSSING (ROAD OVER RAIL)
- DRAINAGE STRUCTURE (DS) (INDICATIVE ONLY)
- RAILWAY BRIDGE
- WATER COURSE
- RAILWAY CORRIDOR
- EMBANKMENT TOE
- CUTTING TOE
- STREAM DIVERSION
- FUTURE PIPE LINE
- EXISTING SERVICES

DRAWN	V SURESH	18/12/12	
DRAFTING CHECK	A S SUBRAHMANYAM	18/12/12	
ENG. APPROVED	AN KESKAR	18/12/12	
PROJECT MANAGER	RICHARD BROMILOW	18/12/12	
RPEQ APPROVAL SIGNED:	CHRIS WARNOCK		
NAME:	CHRIS WARNOCK	18/12/12	
RPEQ No:	03423		

calibre
Calibre Operations Pty. Ltd.
Ground Floor, 545 Queen St
Brisbane QLD 4000
Australia
Tel: +61 (0)7 3001 6000
Fax: +61 (0)7 3001 6050

aarvee associates
Aarvee Associates Pty. Ltd.
Suite 39, Level 22, 69 Ann St
Brisbane QLD 4000
Australia
Tel: +61 (0)7 3112 5297
Fax: +61 (0)7 3112 5101

adani™

THIS DRAWING CONTAINS CONFIDENTIAL INFORMATION TO CALIBRE OPERATIONS PTY. LTD. & ITS AFFILIATED PARTIES. THE CLIENT HAS THE RIGHT TO USE THE INFORMATION CONTAINED IN THIS DRAWING PURSUANT TO CONTRACT BETWEEN CLIENT AND CALIBRE OPERATIONS PTY. LTD.

ORIGINAL SIZE A1

CARMICHAEL COAL MINE AND RAIL PROJECT
ADANI CLIENT'S ENGINEER - RAIL
CIVIL - EARTHWORKS
PLAN AND PROFILE - CH 164.5 - CH 168 - SHEET 48

MASTER COPY

PROJECT No. CARP12033
DRG No. CARP12033-1000-DWG-Y-148
REV 0

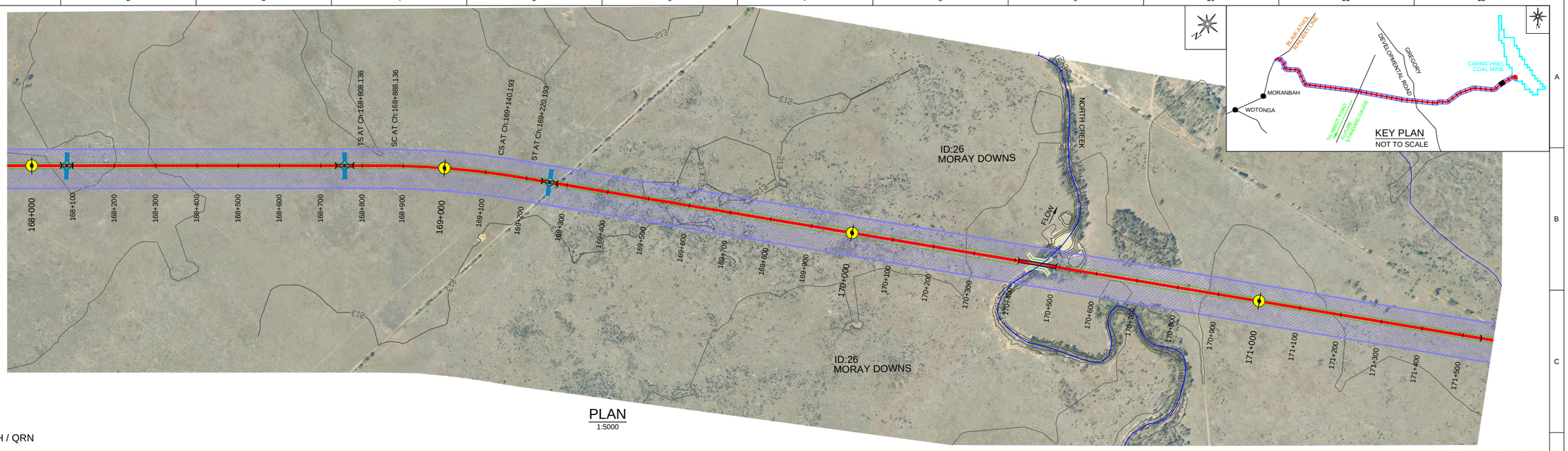

PLAN
1:5000

MORANBAH / QRN
SHEET 48

TO CARMICHAEL COAL MINE
SHEET 50

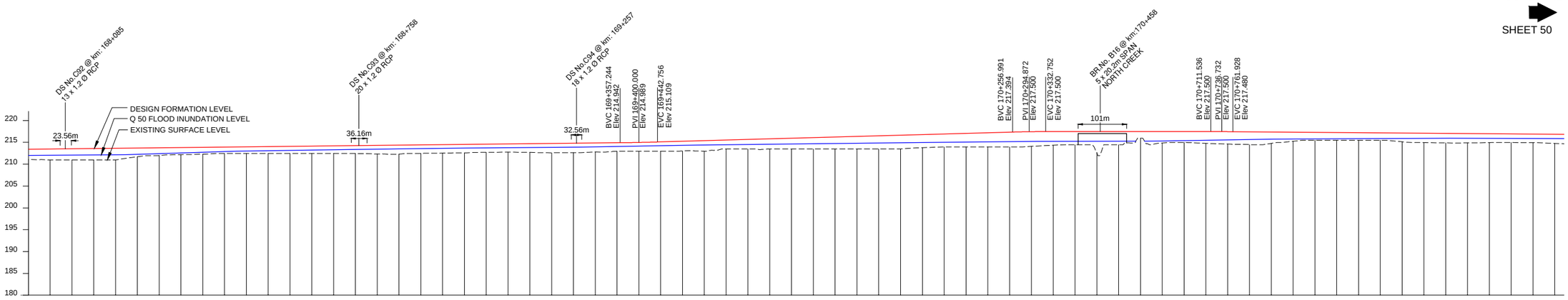

VERTICAL ALIGNMENT: 1:913 | K500 | 1:356 | K270 | LEVEL | K630 | 1:-1250

HORIZONTAL ALIGNMENT: L = 6498.30m | Tr= 80.00m | R =2000m | Tr= 80.00m | L = 7086.69m

CHAINAGES	DEPTH OF CUTTING(-)	HEIGHT OF BANK(+)	FORMATION LEVELS	SURFACE LEVELS
168+000		2.386	213.455	211.069
168+050		2.510	213.510	211.000
168+100		2.565	213.565	211.000
168+150		2.619	213.619	211.000
168+200		2.668	213.674	211.006
168+250		1.999	213.729	211.730
168+300		1.778	213.784	212.006
168+350		1.633	213.838	212.205
168+400		1.573	213.893	212.320
168+450		1.448	213.948	212.500
168+500		1.503	214.003	212.500
168+550		1.558	214.058	212.500
168+600		1.612	214.112	212.500
168+650		1.667	214.167	212.500
168+700		1.722	214.222	212.500
168+750		1.805	214.277	212.472
168+800		1.974	214.332	212.358
168+850		2.057	214.386	212.329
168+900		1.939	214.441	212.502
168+950		1.944	214.496	212.552
169+000		1.919	214.551	212.632
169+050		1.871	214.606	212.735
169+100		1.876	214.660	212.784
169+150		1.989	214.715	212.726
169+200		2.135	214.770	212.635
169+250		2.163	214.825	212.662
169+300		2.067	214.879	212.812
169+350		1.938	214.934	212.996
169+400		2.007	215.007	213.000
169+450		2.129	215.129	213.000
169+500		2.213	215.270	213.057
169+550		2.410	215.410	213.000
169+600		2.050	215.550	213.500
169+650		2.191	215.691	213.500
169+700		2.331	215.831	213.500
169+750		2.471	215.971	213.500
169+800		2.611	216.111	213.500
169+850		2.752	216.252	213.500
169+900		2.892	216.392	213.500
169+950		3.032	216.532	213.500
170+000		3.158	216.673	213.515
170+050		3.000	216.813	213.813
170+100		2.961	216.953	213.992
170+150		3.093	217.093	214.000
170+200		3.234	217.234	214.000
170+250		3.374	217.374	214.000
170+300		3.373	217.480	214.107
170+350		3.123	217.500	214.377
170+400		3.000	217.500	214.500
170+450		4.858	217.500	212.642
170+500		3.000	217.500	214.500
170+550		1.500	217.500	216.000
170+600		2.611	217.500	214.889
170+650		2.500	217.500	215.000
170+700		2.706	217.500	214.794
170+750		2.851	217.488	214.637
170+800		2.942	217.449	214.507
170+850		2.613	217.409	214.796
170+900		2.082	217.369	215.287
170+950		1.829	217.329	215.500
171+000		1.789	217.289	215.500
171+050		1.749	217.249	215.500
171+100		1.709	217.209	215.500
171+150		2.009	217.169	215.160
171+200		2.152	217.129	214.977
171+250		2.185	217.089	214.904
171+300		2.142	217.049	214.907
171+350		2.053	217.009	214.956
171+400		1.969	216.969	215.000
171+450		1.976	216.929	214.953
171+500		2.092	216.889	214.797

LONGITUDINAL PROFILE ALONG RAIL FORMATION CENTRE LINE

HORIZONTAL-1:5000, VERTICAL-1:500

HORIZONTAL 1:5000 — 0 50 100 150 200 Metres

VERTICAL 1:500 — 0 5 10 15 20 Metres

ISSUED FOR USE
NOT FOR CONSTRUCTION

REVISIONS

REV	BY	DATE	DESCRIPTION	CKD	APP
0	VS	18/12/12	ISSUED FOR USE	CW	RB

LEGEND:-

- KILOMETRE POST
- START OF PASSING LOOP
- END OF PASSING LOOP
- PROPERTY BOUNDARY
- PROPOSED ALIGNMENT (OPTION-11 REV-2)
- EXISTING RAILWAY LINE
- OCCUPATIONAL CROSSING (OC) AT GRADE
- OCCUPATIONAL CROSSING (OC) UNDER PASS
- ROAD CROSSING (AT GRADE)
- ROAD CROSSING (RAIL OVER ROAD)
- ROAD CROSSING (ROAD OVER RAIL)
- DRAINAGE STRUCTURE (DS) (INDICATIVE ONLY)
- RAILWAY BRIDGE
- WATER COURSE
- RAILWAY CORRIDOR
- EMBANKMENT TOE
- CUTTING TOE
- STREAM DIVERSION
- FUTURE PIPE LINE
- EXISTING SERVICES

DRAWN	V SURESH	18/12/12
DRAFTING CHECK	A S SUBRAHMANYAM	18/12/12
ENG. APPROVED	AN KESKAR	18/12/12
PROJECT MANAGER	RICHARD BROMILOW	18/12/12
RPEQ APPROVAL		
SIGNED:	CHRIS WARNOCK	18/12/12
NAME:	CHRIS WARNOCK	
RPEQ No:	03423	

calibre
Calibre Operations Pty. Ltd.
Ground Floor, 545 Queen St
Brisbane QLD 4000
Australia
Tel: +61 (0)7 3001 6000
Fax: +61 (0)7 3001 6050

aarvee associates
Aarvee Associates Pty. Ltd.
Suite 39, Level 22, 69 Ann St
Brisbane QLD 4000
Australia
Tel: +61 (0)7 3112 5297
Fax: +61 (0)7 3112 5101

adani

THIS DRAWING CONTAINS CONFIDENTIAL INFORMATION TO CALIBRE OPERATIONS PTY. LTD. & ITS AFFILIATED PARTIES. THE CLIENT HAS THE RIGHT TO USE THE INFORMATION CONTAINED IN THIS DRAWING PURSUANT TO CONTRACT BETWEEN CLIENT AND CALIBRE OPERATIONS PTY. LTD.

ORIGINAL SIZE A1

CARMICHAEL COAL MINE AND RAIL PROJECT
ADANI CLIENT'S ENGINEER - RAIL
CIVIL - EARTHWORKS
PLAN AND PROFILE - CH 168 - CH 171.5 - SHEET 49

MASTER COPY

PROJECT No. CARP12033

DRG No. CARP12033-1000-DWG-Y-149

REV 0

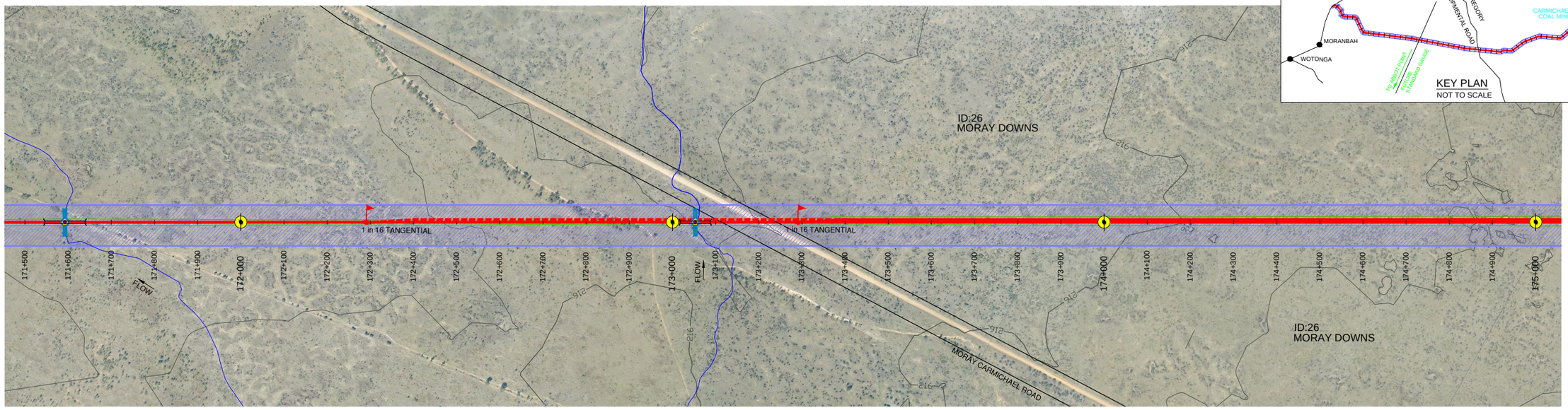

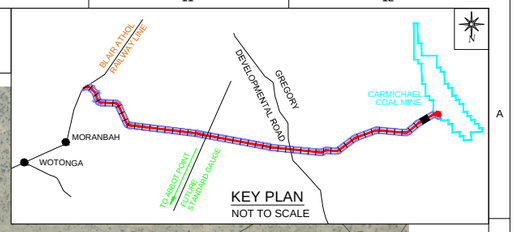

MORANBAH / QRN

SHEET 49

PLAN

1:5000

TO CARMICHAEL COAL MINE

SHEET 51

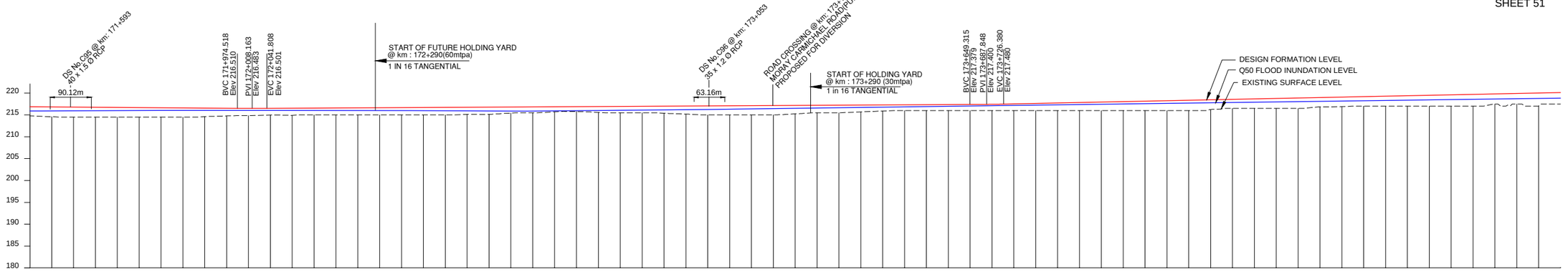

VERTICAL ALIGNMENT: 1:-1250 | K500 | 1:1832 | K500 | 1:479

DEPTH OF CUTTING(-)

HEIGHT OF BANK(+): 2.092 2.264 2.309 2.269 2.230 2.190 2.150 2.110 1.954 1.748 1.639 1.538 1.624 1.560 1.588 1.615 1.642 1.670 1.697 1.724 1.627 1.624 1.366 1.333 1.161 1.123 1.332 1.443 1.470 1.597 1.836 2.052 2.079 2.106 2.134 1.918 1.688 1.716 1.553 1.378 1.297 1.297 1.325 1.352 1.379 1.432 1.530 1.634 1.738 1.843 1.947 2.052 2.156 2.260 2.365 2.252 2.073 2.178 2.282 2.384 2.158 2.185 2.200 2.304 2.408 2.513 2.617 2.721 2.326 2.430 2.990 2.639

FORMATION LEVELS: 216.889 216.849 216.809 216.769 216.730 216.690 216.650 216.610 216.570 216.530 216.496 216.506 216.533 216.560 216.588 216.615 216.642 216.670 216.697 216.724 216.752 216.779 216.806 216.833 216.861 216.888 216.915 216.943 216.970 216.997 217.024 217.052 217.079 217.106 217.134 217.161 217.188 217.216 217.243 217.270 217.297 217.325 217.352 217.379 217.432 217.530 217.634 217.738 217.843 217.947 218.052 218.156 218.260 218.365 218.469 218.573 218.678 218.782 218.886 218.991 219.095 219.200 219.304 219.408 219.513 219.617 219.721 219.826 219.930 220.034 220.139

SURFACE LEVELS: 214.797 214.585 214.500 214.500 214.500 214.500 214.500 214.500 214.616 214.782 214.857 214.968 214.909 215.000 215.000 215.000 215.000 215.000 215.000 215.000 215.125 215.155 215.440 215.500 215.700 215.765 215.583 215.500 215.500 215.400 215.188 215.000 215.000 215.000 215.000 215.243 215.500 215.500 215.690 215.892 216.000 216.000 216.000 216.000 216.000 216.000 216.000 216.000 216.000 216.000 216.000 216.000 216.000 216.000 216.000 216.000 216.217 216.500 216.500 216.500 216.502 216.833 216.910 217.000 217.000 217.000 217.000 217.000 217.000 217.500 217.500 217.044 217.500

HORIZONTAL ALIGNMENT: L = 7086.69m

CHAINAGES: 171+500 171+550 171+600 171+650 171+700 171+750 171+800 171+850 171+900 171+950 172+000 172+050 172+100 172+150 172+200 172+250 172+300 172+350 172+400 172+450 172+500 172+550 172+600 172+650 172+700 172+750 172+800 172+850 172+900 172+950 173+000 173+050 173+100 173+150 173+200 173+250 173+300 173+350 173+400 173+450 173+500 173+550 173+600 173+650 173+700 173+750 173+800 173+850 173+900 173+950 174+000 174+050 174+100 174+150 174+200 174+250 174+300 174+350 174+400 174+450 174+500 174+550 174+600 174+650 174+700 174+750 174+800 174+850 174+900 174+950 175+000

LONGITUDINAL PROFILE ALONG RAIL FORMATION CENTRE LINE

HORIZONTAL-1:5000, VERTICAL-1:500

HORIZONTAL 1:5000 — 0 50 100 150 200 Metres

VERTICAL 1:500 — 0 5 10 15 20 Metres

ISSUED FOR USE
NOT FOR CONSTRUCTION

REV	BY	DATE	DESCRIPTION	CKD	APP
0	VS	18/12/12	ISSUED FOR USE	CW	RB

LEGEND:-

- KILOMETRE POST
- START OF PASSING LOOP
- END OF PASSING LOOP
- PROPERTY BOUNDARY
- PROPOSED ALIGNMENT (OPTION-11 REV-2)
- EXISTING RAILWAY LINE
- OCCUPATIONAL CROSSING (OC) AT GRADE
- OCCUPATIONAL CROSSING (OC) UNDER PASS
- ROAD CROSSING (AT GRADE)
- ROAD CROSSING (RAIL OVER ROAD)
- ROAD CROSSING (ROAD OVER RAIL)
- DRAINAGE STRUCTURE (DS) (INDICATIVE ONLY)
- RAILWAY BRIDGE
- WATER COURSE
- RAILWAY CORRIDOR
- EMBANKMENT TOE
- CUTTING TOE
- STREAM DIVERSION
- FUTURE PIPE LINE
- EXISTING SERVICES

DRAWN	V SURESH	18/12/12
DRAFTING CHECK	A S SUBRAHMANYAM	18/12/12
ENG. APPROVED	AN KESKAR	18/12/12
PROJECT MANAGER	RICHARD BROMILOW	18/12/12
RPEQ APPROVAL		
SIGNED:	CHRIS WARNOCK	
NAME:	CHRIS WARNOCK	18/12/12
RPEQ No:	03423	

calibre
Calibre Operations Pty. Ltd.
Ground Floor, 545 Queen St
Brisbane QLD 4000
Australia
Tel: +61 (0)7 3001 6000
Fax: +61 (0)7 3001 6050

aarvee associates
Aarvee Associates Pty. Ltd.
Suite 39, Level 22, 69 Ann St
Brisbane QLD 4000
Australia
Tel: +61 (0)7 3112 5297
Fax: +61 (0)7 3112 5101

adani

THIS DRAWING CONTAINS CONFIDENTIAL INFORMATION TO CALIBRE OPERATIONS PTY. LTD. & ITS AFFILIATED PARTIES. THE CLIENT HAS THE RIGHT TO USE THE INFORMATION CONTAINED IN THIS DRAWING PURSUANT TO CONTRACT BETWEEN CLIENT AND CALIBRE OPERATIONS PTY. LTD.

ORIGINAL SIZE A1

CARMICHAEL COAL MINE AND RAIL PROJECT
ADANI CLIENT'S ENGINEER - RAIL
CIVIL - EARTHWORKS
PLAN AND PROFILE - CH 171.5 - CH 175 - SHEET 50

MASTER COPY

PROJECT No. CARP12033

DRG No. CARP12033-1000-DWG-Y-150

REV 0

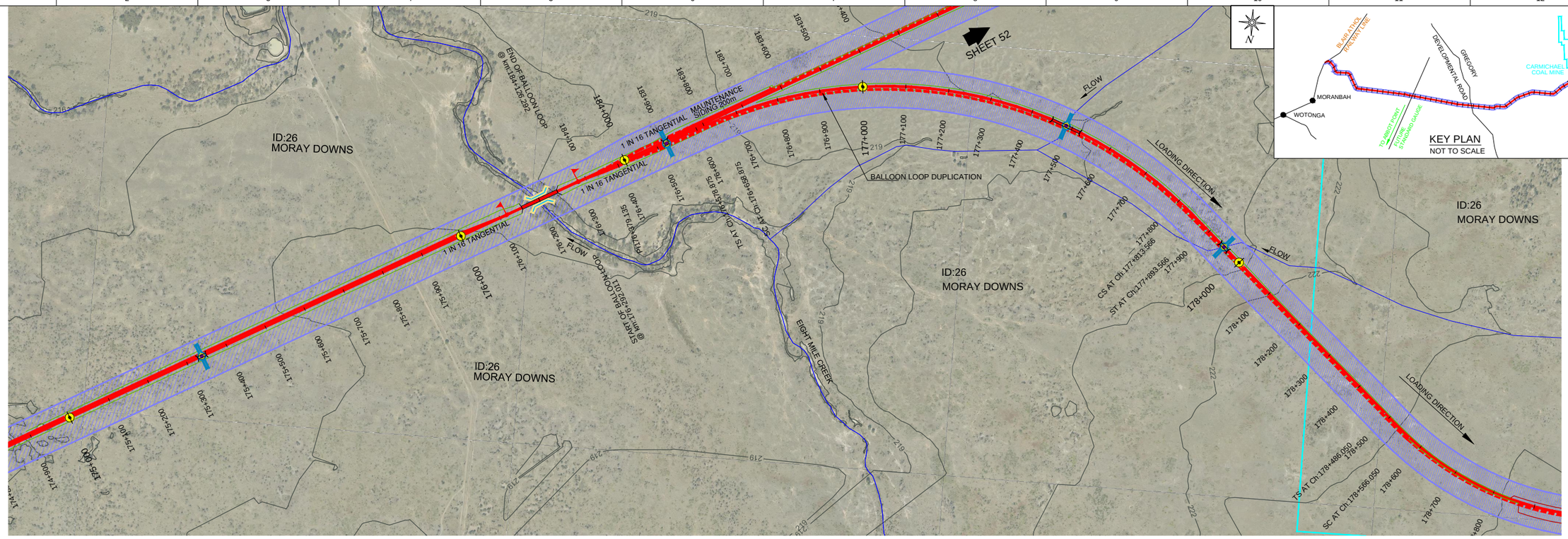

MORANBAH / QRN
SHEET 50

PLAN
1:5000

TO CARMICHAEL COAL MINE
SHEET 52

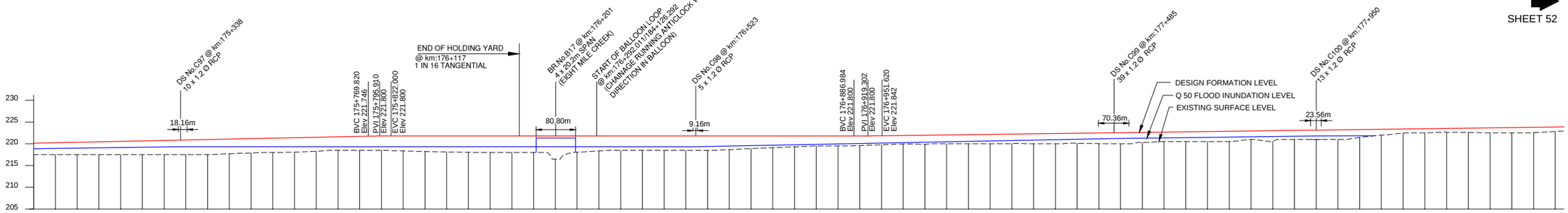

VERTICAL ALIGNMENT: 1:479 | K250 | LEVEL | K500 | 1:774

DEPTH OF CUTTING(-)

HEIGHT OF BANK(+): 2.639 2.743 2.847 2.952 3.056 3.161 3.265 3.369 3.474 3.354 3.308 3.287 3.306 3.206 3.100 3.204 3.290 3.447 3.584 3.682 3.759 3.800 3.800 3.800 5.300 3.742 3.445 3.300 3.300 3.313 3.300 3.300 3.134 2.904 2.696 2.490 2.300 2.300 2.210 2.062 1.940 2.076 2.034 2.098 2.163 2.178 2.292 2.357 2.295 2.454 2.551 2.302 2.180 2.245 2.309 2.374 1.938 2.402 2.068 2.132 2.197 1.783 1.326 0.952 0.956 0.855 0.974 1.149 1.214 1.209 1.005

FORMATION LEVELS: 220.139 220.243 220.347 220.452 220.556 220.661 220.765 220.869 220.974 221.078 221.182 221.287 221.391 221.495 221.600 221.704 221.790 221.802 221.840 221.904 221.969 222.034 222.098 222.163 222.227 222.292 222.357 222.421 222.486 222.551 222.615 222.680 222.745 222.809 222.874 222.938 223.003 223.068 223.132 223.197 223.262 223.326 223.391 223.456 223.520 223.585 223.649 223.714 223.779 223.843

SURFACE LEVELS: 217.500 217.500 217.500 217.500 217.500 217.500 217.500 217.500 217.500 217.724 217.874 218.000 218.085 218.289 218.500 218.500 218.500 218.353 218.216 218.118 218.041 218.000 218.000 218.000 216.500 218.058 218.355 218.500 218.500 218.487 218.500 218.500 218.666 218.896 219.104 219.310 219.500 219.500 219.592 219.778 219.964 219.893 220.000 220.000 220.000 220.049 220.000 220.000 220.126 220.032 220.000 220.313 220.500 220.500 220.500 220.500 221.000 220.601 221.000 221.000 221.479 222.000 222.439 222.500 222.665 222.611 222.500 222.500 222.570 222.838

HORIZONTAL ALIGNMENT: L = 7086.69m | R = 400m | L1 = 38.98m | R = 400m | L2 = 152.55m | Tr= 80.00m | R =1000m | Tr= 80.00m | L = 592.48m

CHAINAGES: 175+000 175+050 175+100 175+150 175+200 175+250 175+300 175+350 175+400 175+450 175+500 175+550 175+600 175+650 175+700 175+750 175+800 175+850 175+900 175+950 176+000 176+050 176+100 176+150 176+200 176+250 176+300 176+350 176+400 176+450 176+500 176+550 176+600 176+650 176+700 176+750 176+800 176+850 176+900 176+950 177+000 177+050 177+100 177+150 177+200 177+250 177+300 177+350 177+400 177+450 177+500 177+550 177+600 177+650 177+700 177+750 177+800 177+850 177+900 177+950 178+000 178+050 178+100 178+150 178+200 178+250 178+300 178+350 178+400 178+450 178+500

LONGITUDINAL PROFILE ALONG RAIL FORMATION CENTRE LINE
HORIZONTAL-1:5000, VERTICAL-1:500

HORIZONTAL 1:5000 — 0 50 100 150 200 Metres
VERTICAL 1:500 — 0 5 10 15 20 Metres

ISSUED FOR USE
NOT FOR CONSTRUCTION

REV	BY	DATE	DESCRIPTION	CKD	APP
0	VS	18/12/12	ISSUED FOR USE	CW	RB

REVISIONS

LEGEND:-
- KILOMETRE POST
- START OF PASSING LOOP
- END OF PASSING LOOP
- PROPERTY BOUNDARY
- PROPOSED ALIGNMENT (OPTION-11 REV-2)
- EXISTING RAILWAY LINE
- OCCUPATIONAL CROSSING (OC) AT GRADE
- OCCUPATIONAL CROSSING (OC) UNDER PASS
- ROAD CROSSING (AT GRADE)
- ROAD CROSSING (RAIL OVER ROAD)
- ROAD CROSSING (ROAD OVER RAIL)
- DRAINAGE STRUCTURE (DS) (INDICATIVE ONLY)
- RAILWAY BRIDGE
- WATER COURSE
- RAILWAY CORRIDOR
- STREAM DIVERSION
- EMBANKMENT TOE
- CUTTING TOE
- CARMICHAEL COAL MINE BOUNDARY
- EXISTING SERVICES

DRAWN	V SURESH	18/12/12
DRAFTING CHECK	A S SUBRAHMANYAM	18/12/12
ENG. APPROVED	AN KESKAR	18/12/12
PROJECT MANAGER	RICHARD BROMILOW	18/12/12
RPEQ APPROVAL SIGNED:	CHRIS WARNOCK	18/12/12
NAME:	CHRIS WARNOCK	
RPEQ No:	03423	

calibre
Calibre Operations Pty. Ltd.
Ground Floor, 545 Queen St
Brisbane QLD 4000
Australia
Tel: +61 (0)7 3001 6000
Fax: +61 (0)7 3001 6050

aarvee associates
Aarvee Associates Pty. Ltd.
Suite 39, Level 22, 69 Ann St
Brisbane QLD 4000
Australia
Tel: +61 (0)7 3112 5297
Fax: +61 (0)7 3112 5101

adani

THIS DRAWING CONTAINS CONFIDENTIAL INFORMATION TO CALIBRE OPERATIONS PTY. LTD. & ITS AFFILIATED PARTIES. THE CLIENT HAS THE RIGHT TO USE THE INFORMATION CONTAINED IN THIS DRAWING PURSUANT TO CONTRACT BETWEEN CLIENT AND CALIBRE OPERATIONS PTY. LTD.

ORIGINAL SIZE A1

CARMICHAEL COAL MINE AND RAIL PROJECT
ADANI CLIENT'S ENGINEER - RAIL
CIVIL - EARTHWORKS
PLAN AND PROFILE - CH 175 - CH 178.5 - SHEET 51

MASTER COPY

PROJECT No. CARP12033
DRG No. CARP12033-1000-DWG-Y-151
REV 0

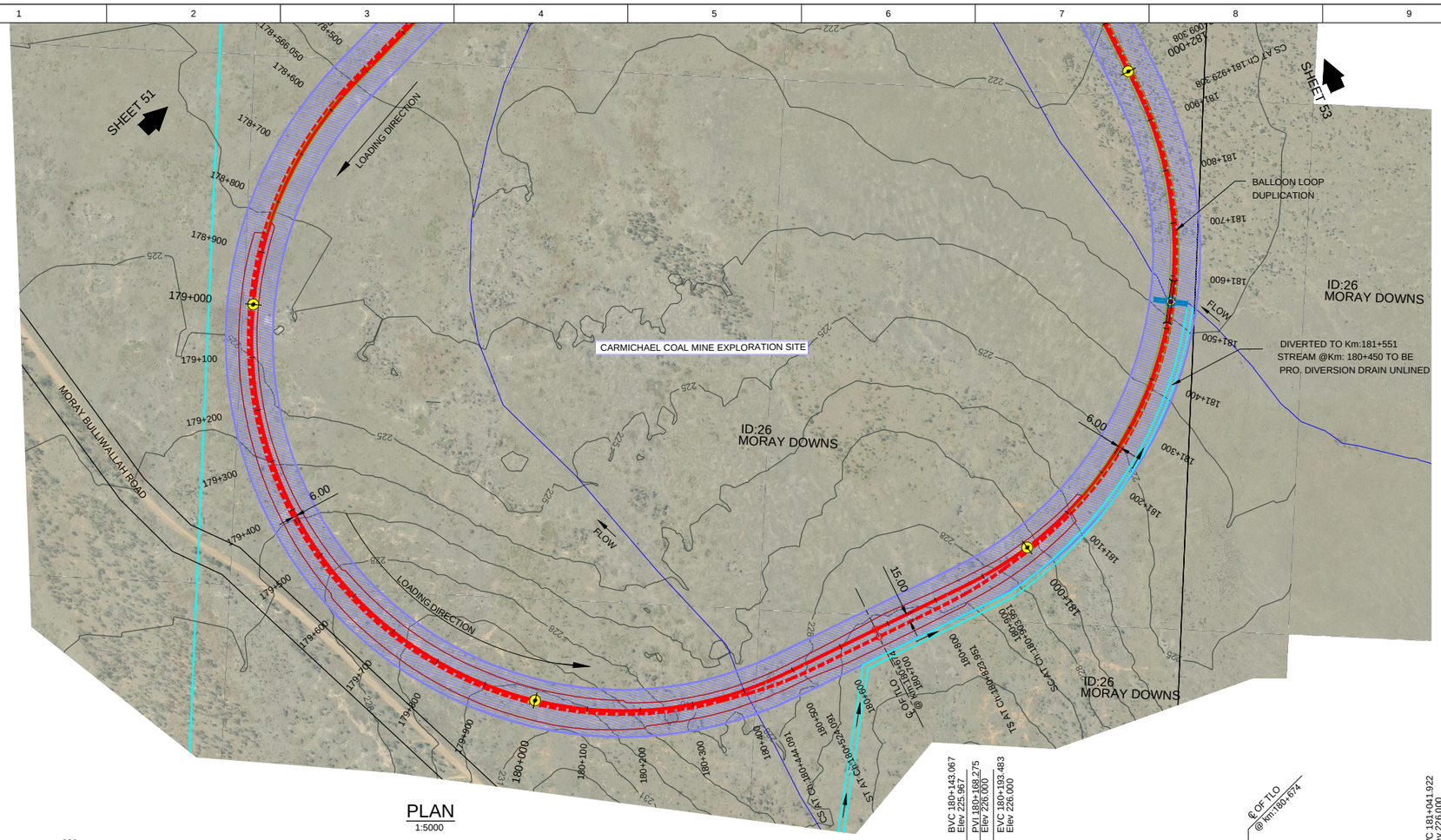

PLAN
1:5000

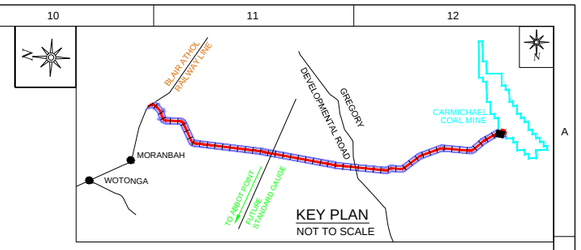

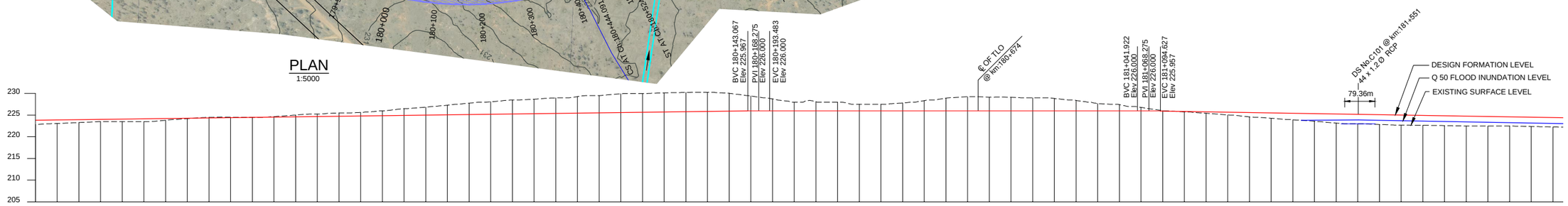

VERTICAL ALIGNMENT: 1:774 | K390 | LEVEL | K320 | 1:-607

CHAINAGES	DEPTH OF CUTTING(-)	HEIGHT OF BANK(+)	FORMATION LEVELS	SURFACE LEVELS
178+500		1.005	223.843	222.838
178+550		0.828	223.908	223.080
178+600		0.677	223.973	223.296
178+650		0.537	224.037	223.500
178+700		0.602	224.102	223.500
178+750		0.667	224.167	223.500
178+800		0.410	224.231	223.821
178+850		0.102	224.296	224.194
178+900			224.360	224.500
178+950			224.425	224.512
179+000			224.490	224.500
179+050			224.554	224.658
179+100			224.619	225.027
179+150			224.684	225.248
179+200			224.748	225.498
179+250			224.813	225.634
179+300			224.878	226.000
179+350			224.942	226.500
179+400			225.007	226.854
179+450			225.071	227.300
179+500			225.136	227.767
179+550			225.201	228.094
179+600			225.265	228.500
179+650			225.330	228.674
179+700			225.395	228.985
179+750			225.459	229.274
179+800			225.524	229.507
179+850			225.589	229.925
179+900			225.653	230.000
179+950			225.718	230.128
180+000	0.140		225.782	230.221
180+050	0.087		225.847	230.267
180+100	0.010		225.912	230.045
180+150	0.104		225.976	229.428
180+200	0.408		226.000	228.742
180+250	0.564		226.000	228.000
180+300	0.750		226.000	228.094
180+350	0.821		226.000	228.000
180+400	1.122		226.000	227.500
180+450	1.558		226.000	227.500
180+500	1.847		226.000	227.803
180+550	2.229		226.000	228.359
180+600	2.631		226.000	228.928
180+650	2.893		226.000	229.248
180+700	3.235		226.000	229.151
180+750	3.344		226.000	229.113
180+800	3.590		226.000	229.000
180+850	3.815		226.000	228.859
180+900	3.983		226.000	228.405
180+950	4.336		226.000	227.665
181+000	4.347		226.000	227.436
181+050	4.410		226.000	226.790
181+100	4.439		225.999	226.050
181+150	4.420		225.948	225.766
181+200	4.133		225.865	225.451
181+250	3.452	0.099	225.783	225.057
181+300	2.742	0.332	225.701	224.610
181+350	2.000	0.644	225.618	224.289
181+400	2.094	1.008	225.536	223.932
181+450	2.000	1.247	225.454	223.595
181+500	1.500	1.522	225.371	223.173
181+550	1.500	1.776	225.289	223.000
181+600	1.803	2.116	225.207	222.855
181+650	2.359	2.207	225.124	222.715
181+700	2.928	2.269	225.042	222.662
181+750	3.248	2.327	224.960	222.591
181+800	3.151	2.298	224.877	222.500
181+850	3.113	2.286	224.795	222.500
181+900	3.000	2.295	224.712	222.495
181+950	2.859	2.212	224.630	222.386
182+000	2.405	2.135	224.548	222.286
	1.665	2.162	224.465	
	1.436	2.179		
	0.791			
	0.102			

HORIZONTAL ALIGNMENT: Tr= 80.00m | R =-700m | Tr= 80.00m | L = 299.86m | Tr= 80.00m | R =-700m | Tr= 80.00m

LONGITUDINAL PROFILE ALONG RAIL FORMATION CENTRE LINE

HORIZONTAL-1:5000, VERTICAL-1:500

HORIZONTAL 1:5000 — 0 50 100 150 200 Metres

VERTICAL 1:500 — 0 5 10 15 20 Metres

ISSUED FOR USE
NOT FOR CONSTRUCTION

REV	BY	DATE	DESCRIPTION	CKD	APP
0	VS	18/12/12	ISSUED FOR USE	CW	RB

REVISIONS

LEGEND:-
- KILOMETRE POST
- START OF PASSING LOOP
- END OF PASSING LOOP
- PROPERTY BOUNDARY
- PROPOSED ALIGNMENT (OPTION-11 REV-2)
- EXISTING RAILWAY LINE
- OCCUPATIONAL CROSSING (OC) AT GRADE
- OCCUPATIONAL CROSSING (OC) UNDER PASS
- ROAD CROSSING (AT GRADE)
- ROAD CROSSING (RAIL OVER ROAD)
- ROAD CROSSING (ROAD OVER RAIL)
- DRAINAGE STRUCTURE (DS) (INDICATIVE ONLY)
- RAILWAY BRIDGE
- WATER COURSE
- RAILWAY CORRIDOR
- STREAM DIVERSION
- EMBANKMENT TOE
- CUTTING TOE
- CARMICHAEL COAL MINE BOUNDARY
- EXISTING SERVICES

DRAWN	V SURESH	18/12/12
DRAFTING CHECK	A S SUBRAHMANYAM	18/12/12
ENG. APPROVED	AN KESKAR	18/12/12
PROJECT MANAGER	RICHARD BROMILOW	18/12/12
RPEQ APPROVAL		
SIGNED:	CHRIS WARNOCK	
NAME:	CHRIS WARNOCK	18/12/12
RPEQ No:	03423	

calibre
Calibre Operations Pty. Ltd.
Ground Floor, 545 Queen St
Brisbane QLD 4000
Australia
Tel: +61 (0)7 3001 6000
Fax: +61 (0)7 3001 6050

aarvee associates
Aarvee Associates Pty. Ltd.
Suite 39, Level 22, 69 Ann St
Brisbane QLD 4000
Australia
Tel: +61 (0)7 3112 5297
Fax: +61 (0)7 3112 5101

adani

THIS DRAWING CONTAINS CONFIDENTIAL INFORMATION TO CALIBRE OPERATIONS PTY. LTD. & ITS AFFILIATED PARTIES. THE CLIENT HAS THE RIGHT TO USE THE INFORMATION CONTAINED IN THIS DRAWING PURSUANT TO CONTRACT BETWEEN CLIENT AND CALIBRE OPERATIONS PTY. LTD.

ORIGINAL SIZE A1

CARMICHAEL COAL MINE AND RAIL PROJECT
ADANI CLIENT'S ENGINEER - RAIL
CIVIL - EARTHWORKS
PLAN AND PROFILE - CH 178.5 - CH 182.00 - SHEET 52

MASTER COPY

PROJECT No. CARP12033

DRG No. CARP12033-1000-DWG-Y-152

REV 0

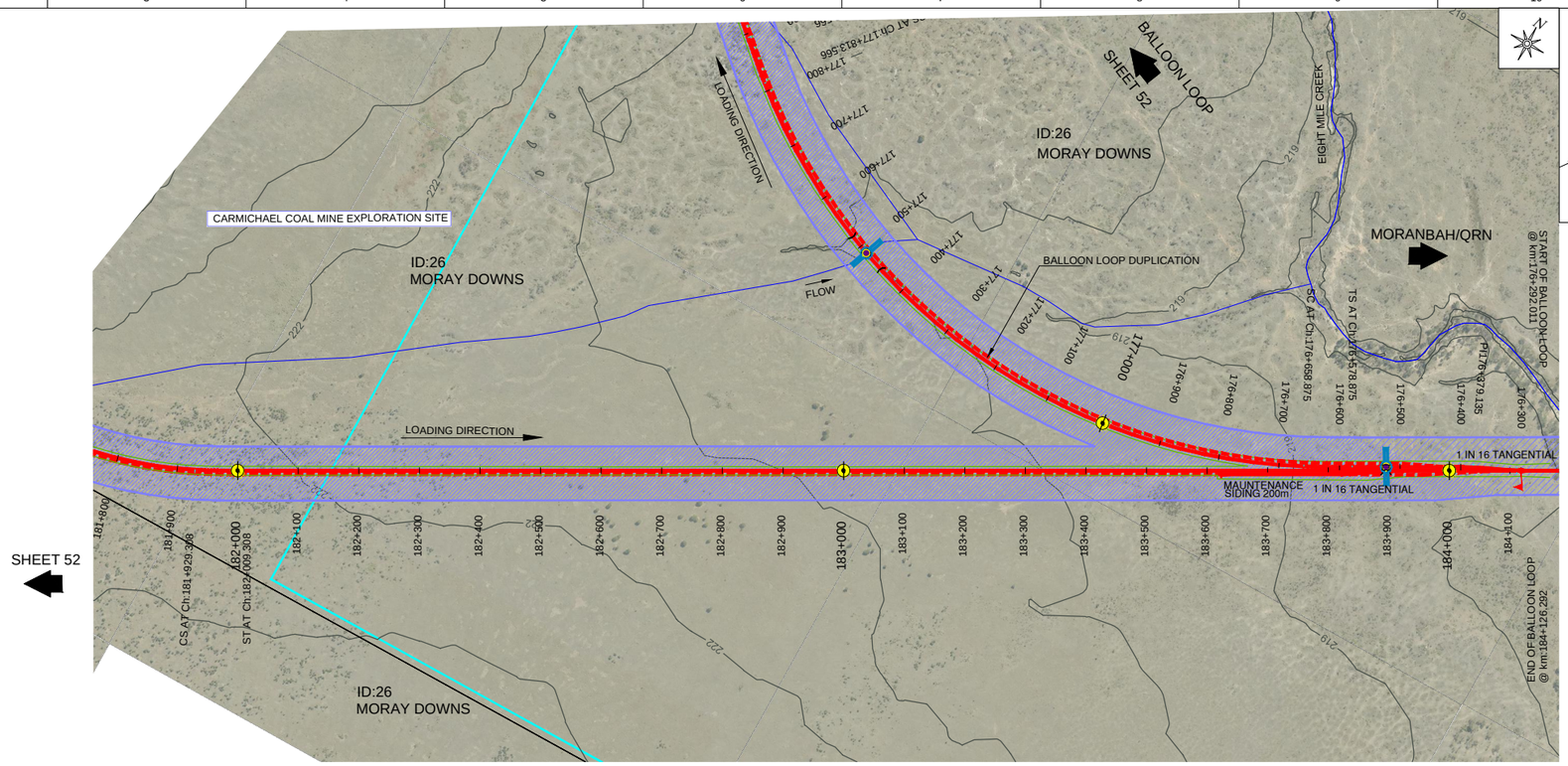

PLAN
1:5000

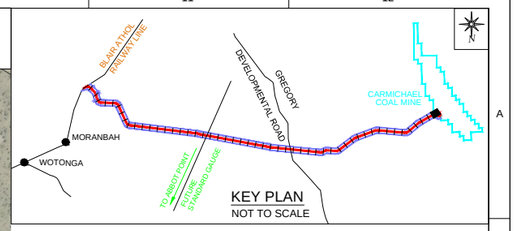

KEY PLAN
NOT TO SCALE

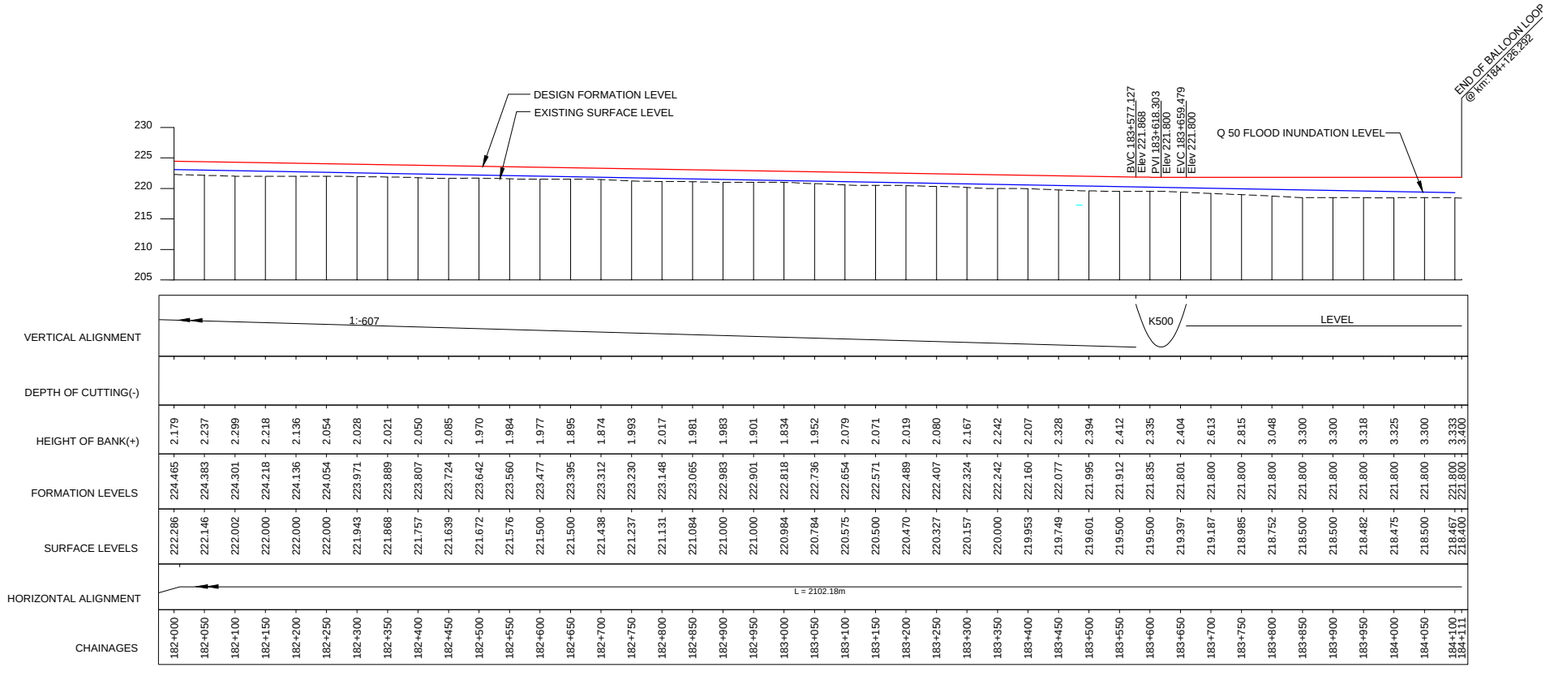

LONGITUDINAL PROFILE ALONG RAIL FORMATION CENTRE LINE
HORIZONTAL-1:5000, VERTICAL-1:500

HORIZONTAL 1:5000 — 0 50 100 150 200 Metres

VERTICAL 1:500 — 0 5 10 15 20 Metres

ISSUED FOR USE
NOT FOR CONSTRUCTION

REVISIONS

REV	BY	DATE	DESCRIPTION	CKD	APP
0	VS	18/12/12	ISSUED FOR USE	CW	RB

LEGEND:-
- KILOMETRE POST
- START OF PASSING LOOP
- END OF PASSING LOOP
- PROPERTY BOUNDARY
- PROPOSED ALIGNMENT (OPTION-11 REV-2)
- EXISTING RAILWAY LINE
- OCCUPATIONAL CROSSING (OC) AT GRADE
- OCCUPATIONAL CROSSING (OC) UNDER PASS
- ROAD CROSSING (AT GRADE)
- ROAD CROSSING (RAIL OVER ROAD)
- ROAD CROSSING (ROAD OVER RAIL)
- DRAINAGE STRUCTURE (DS) (INDICATIVE ONLY)
- RAILWAY BRIDGE
- WATER COURSE
- RAILWAY CORRIDOR
- STREAM DIVERSION
- EMBANKMENT TOE
- CUTTING TOE
- CARMICHAEL COAL MINE BOUNDARY
- EXISTING SERVICES

DRAWN	V SURESH	18/12/12
DRAFTING CHECK	A S SUBRAHMANYAM	18/12/12
ENG. APPROVED	AN KESKAR	18/12/12
PROJECT MANAGER	RICHARD BROMILOW	18/12/12
RPEQ APPROVAL SIGNED:	CHRIS WARNOCK	18/12/12
NAME:	CHRIS WARNOCK	
RPEQ No:	03423	

calibre
Calibre Operations Pty. Ltd.
Ground Floor, 545 Queen St
Brisbane QLD 4000
Australia
Tel: +61 (0)7 3001 6000
Fax: +61 (0)7 3001 6050

aarvee associates
Aarvee Associates Pty. Ltd.
Suite 39, Level 22, 69 Ann St
Brisbane QLD 4000
Australia
Tel: +61 (0)7 3112 5297
Fax: +61 (0)7 3112 5101

adani™
THIS DRAWING CONTAINS CONFIDENTIAL INFORMATION TO CALIBRE OPERATIONS PTY. LTD. & ITS AFFILIATED PARTIES. THE CLIENT HAS THE RIGHT TO USE THE INFORMATION CONTAINED IN THIS DRAWING PURSUANT TO CONTRACT BETWEEN CLIENT AND CALIBRE OPERATIONS PTY. LTD.

ORIGINAL SIZE A1

CARMICHAEL COAL MINE AND RAIL PROJECT
ADANI CLIENT'S ENGINEER - RAIL
CIVIL - EARTHWORKS
PLAN AND PROFILE - CH 182 - CH 184.112 - SHEET 53

MASTER COPY

PROJECT No. CARP12033

DRG No. CARP12033-1000-DWG-Y-153

REV 0

Roads and Crossings Drawings

Carmichael Coal Mine & Rail Project
Front End Engineering Design Report - RAIL

Adani Mining Pty Ltd

CARP12033-REP-G-100 Rev 0
VOLUME 4 - DRAWINGS

calibre

aarvee associates

adani

NOTES:

1. ALL DIMENSIONS IN METRES UNLESS NOTED OTHERWISE.
2. FOR STANDARD SPECIFICATIONS REFER DEPARTMENT OF TRANSPORT AND MAIN ROAD (DTMR) ROAD PLANNING AND DESIGN MANUAL
3. DRAWING TO BE READ IN CONJUNCTION WITH STANDARD NOTES DRAWING: CARP12033-1000-DWG-G-005.

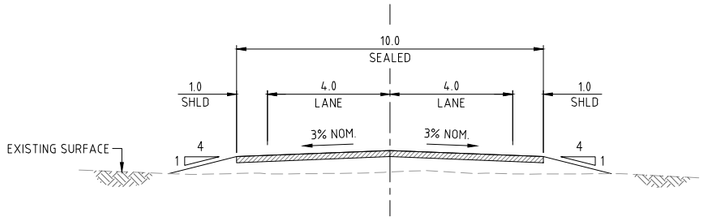

TYPICAL PUBLIC ROAD SECTION - SEALED
IN FILL <3m
SCALE 1:100

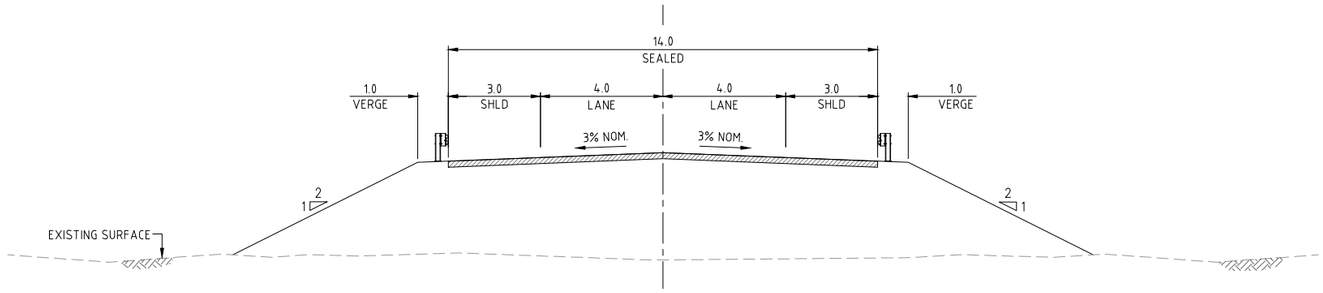

TYPICAL PUBLIC ROAD SECTION - SEALED
IN FILL ≥3m
SCALE 1:100

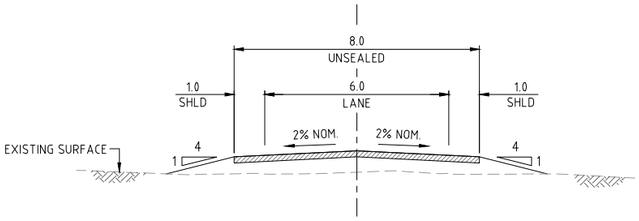

TYPICAL PUBLIC ROAD SECTION - UNSEALED
SCALE 1:100

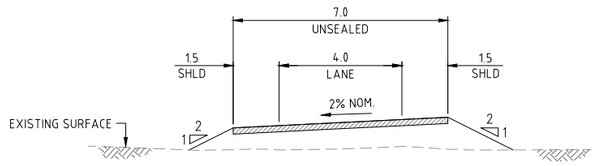

TYPICAL OCCUPATIONAL TRAIL
SCALE 1:100

ISSUED FOR USE
NOT FOR CONSTRUCTION

REVISIONS					
0	PRM	18.12.12	ISSUED FOR USE	DES	SBL
REV	BY	DATE	DESCRIPTION	CKD	APP

DRAWN	P. McMASTER	18.12.12
DRAFTING CHECK	D. SMITH	18.12.12
ENG. APPROVED	G. BOYTAR	18.12.12
PROJECT MANAGER	S. LOWDEN	18.12.12
RPEQ APPROVAL		18.12.12
SIGNED:	R. BROMILOW	
NAME:	R. BROMILOW	
RPEQ No:	11073	

calibre
Calibre Operations Pty. Ltd.
Ground Floor, 545 Queen St
Brisbane QLD 4000
Australia
Tel: +61 (0)7 3001 6000
Fax: +61 (0)7 3001 6050

aarvee associates
Aarvee Associates Pty. Ltd.
Suite 39, Level 22, 69 Ann St
Brisbane QLD 4000
Australia
Tel: +61 (0)7 3112 5297
Fax: +61 (0)7 3112 5101

adani™

THIS DRAWING CONTAINS CONFIDENTIAL INFORMATION TO CALIBRE OPERATIONS PTY. LTD. & ITS AFFILIATED PARTIES. THE CLIENT HAS THE RIGHT TO USE THE INFORMATION CONTAINED IN THIS DRAWING PURSUANT TO CONTRACT BETWEEN CLIENT AND CALIBRE OPERATIONS PTY. LTD.

ORIGINAL SIZE A1

CARMICHAEL COAL MINE AND RAIL PROJECT
ADANI CLIENT'S ENGINEER - RAIL
CIVIL
TYPICAL ROAD CROSS SECTIONS

MASTER COPY

PROJECT No. CARP12033

DRG No. CARP12033-1000-DWG-C-021

REV 0

NOTES:

1. ALL DIMENSIONS ARE IN METRES UNLESS NOTED OTHERWISE.
2. DRAWING TO BE READ IN CONJUNCTION WITH STANDARD NOTES DRAWING: CARP12033-1000-DWG-G-005.
3. UNDERGROUND UTILITIES / SERVICES ARE TO BE LOCATED PRIOR TO WORKS BEING UNDERTAKEN.
4. DRAWING TO BE READ IN CONJUNCTION WITH STRUCTURAL GENERAL ARRANGEMENT DRAWING CARP12033-1000-DWG-G-010.
5. FENCE FROM ABUTMENT TO REMAIN ON TOP OF CREEK EMBANKMENT TO MINIMISE DEBRIS CAPTURED DURING FLOOD EVENTS.

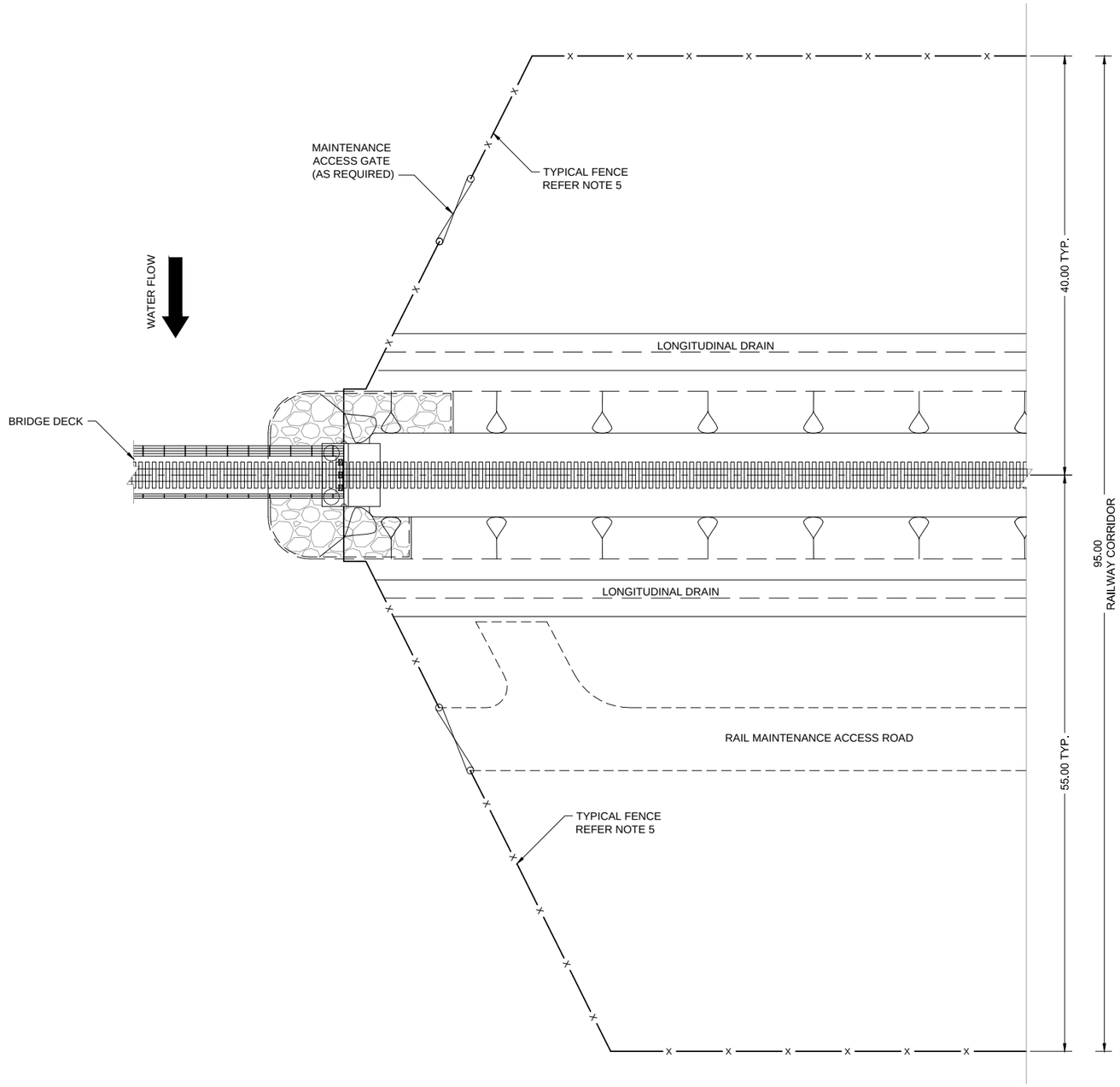

TYPICAL FENCE ARRANGEMENT AT BRIDGE ABUTMENT

SCALE 1:250

LEGEND

FIELD GATES

—— X —— FENCING

0 5 10 15 20 25m

SCALE 1:250

ISSUED FOR USE
NOT FOR CONSTRUCTION

REV	BY	DATE	DESCRIPTION	CKD	APP
0	PRM	18.12.12	ISSUED FOR USE	DES	SBL

REVISIONS

DRAWN	P. McMASTER	18.12.12
DRAFTING CHECK	D. SMITH	18.12.12
ENG. APPROVED	G. BOYTAR	18.12.12
PROJECT MANAGER	S. LOWDEN	18.12.12
RPEQ APPROVAL		18.12.12
SIGNED:	R. BROMILOW	
NAME:	R. BROMILOW	
RPEQ No:	11073	

calibre
Calibre Operations Pty. Ltd.
Ground Floor, 545 Queen St
Brisbane QLD 4000
Australia
Tel: +61 (0)7 3001 6000
Fax: +61 (0)7 3001 6050

aarvee associates
Aarvee Associates Pty. Ltd.
Suite 39, Level 22, 69 Ann St
Brisbane QLD 4000
Australia
Tel: +61 (0)7 3112 5297
Fax: +61 (0)7 3112 5101

adani™
THIS DRAWING CONTAINS CONFIDENTIAL INFORMATION TO CALIBRE OPERATIONS PTY. LTD. & ITS AFFILIATED PARTIES. THE CLIENT HAS THE RIGHT TO USE THE INFORMATION CONTAINED IN THIS DRAWING PURSUANT TO CONTRACT BETWEEN CLIENT AND CALIBRE OPERATIONS PTY. LTD.

ORIGINAL SIZE A1

CARMICHAEL COAL MINE AND RAIL PROJECT
ADANI CLIENT'S ENGINEER - RAIL
CIVIL
TYPICAL FENCE ARRANGEMENT - BRIDGE ABUTMENT

MASTER COPY

PROJECT No. CARP12033

DRG No. CARP12033-1000-DWG-C-051

REV 0

NOTES:

1. ALL DIMENSIONS ARE IN METRES UNLESS NOTED OTHERWISE.
2. DRAWING TO BE READ IN CONJUNCTION WITH STANDARD NOTES DRAWING: CARP12033-1000-DWG-G-005.
3. UNDERGROUND UTILITIES / SERVICES ARE TO BE LOCATED PRIOR TO WORKS BEING UNDERTAKEN.

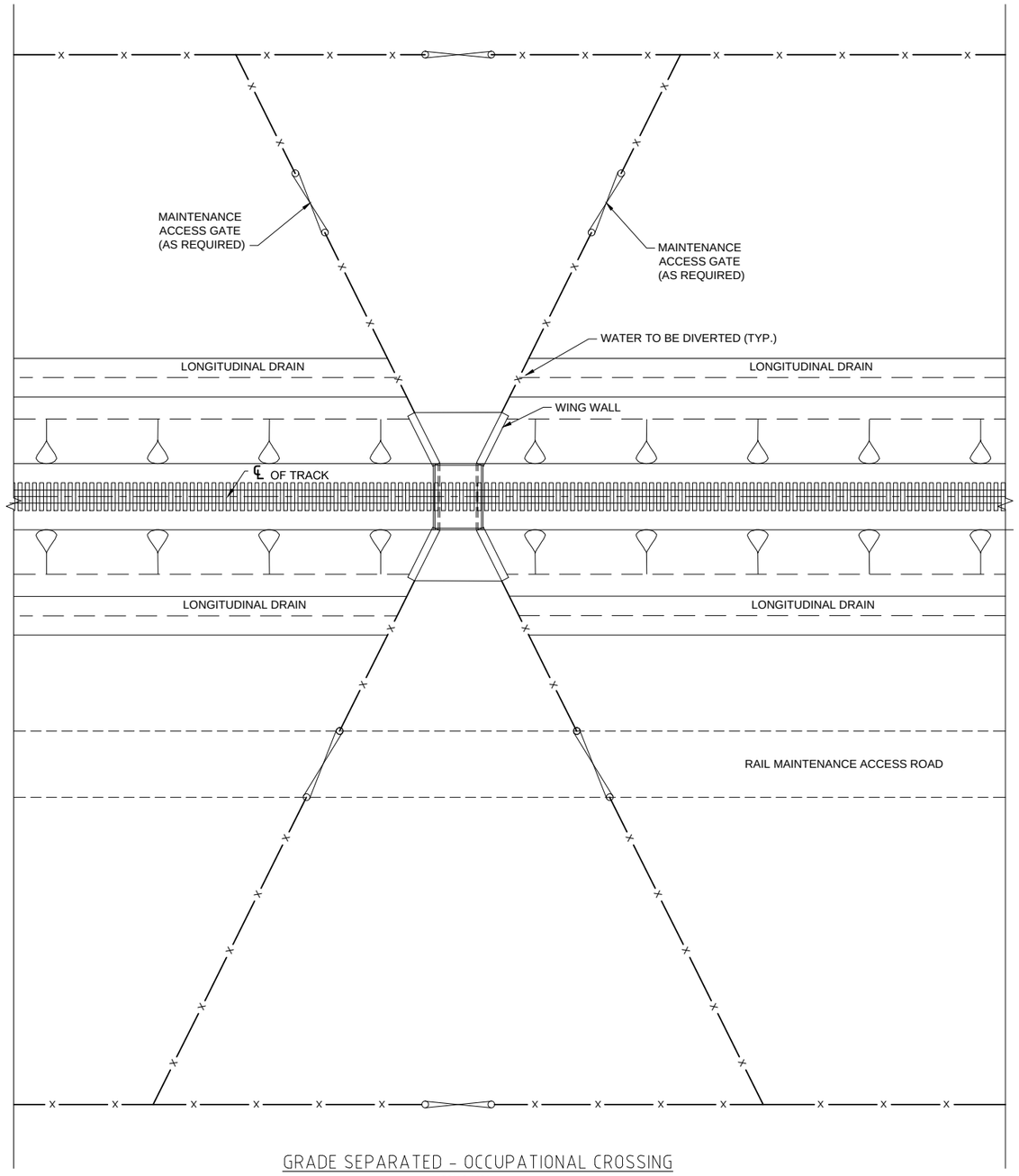

GRADE SEPARATED - OCCUPATIONAL CROSSING

SCALE 1:250

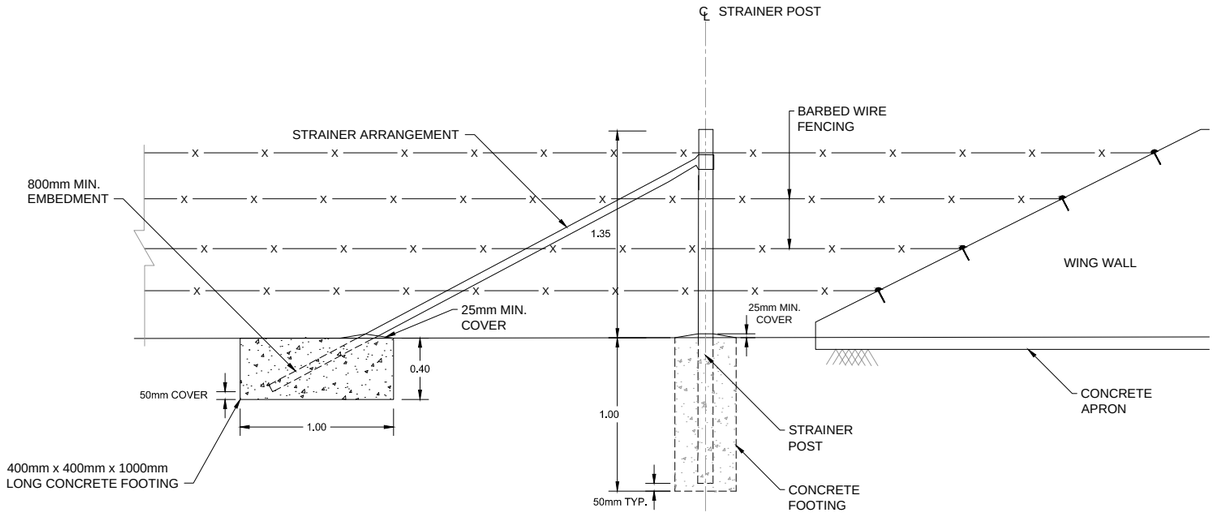

CROSS SECTION AT FENCE TO WING WALL

SCALE 1:20

0 400 800 1200 1600 2000mm

SCALE 1:20

0 5 10 15 20 25m

SCALE 1:250

LEGEND

FIELD GATES

FENCING

ISSUED FOR USE
NOT FOR CONSTRUCTION

REV	BY	DATE	DESCRIPTION	CKD	APP
0	PRM	18.12.12	ISSUED FOR USE	DES	SBL

REVISIONS

DRAWN	P. McMASTER	18.12.12
DRAFTING CHECK	D. SMITH	18.12.12
ENG. APPROVED	G. BOYTAR	18.12.12
PROJECT MANAGER	S. LOWDEN	18.12.12
RPEQ APPROVAL SIGNED: R. BROMILOW NAME: R. BROMILOW RPEQ No: 11073		18.12.12

calibre
Calibre Operations Pty. Ltd.
Ground Floor, 545 Queen St
Brisbane QLD 4000
Australia
Tel: +61 (0)7 3001 6000
Fax: +61 (0)7 3001 6050

aarvee associates
Aarvee Associates Pty. Ltd.
Suite 39, Level 22, 69 Ann St
Brisbane QLD 4000
Australia
Tel: +61 (0)7 3112 5297
Fax: +61 (0)7 3112 5101

adani™

THIS DRAWING CONTAINS CONFIDENTIAL INFORMATION TO CALIBRE OPERATIONS PTY. LTD. & ITS AFFILIATED PARTIES. THE CLIENT HAS THE RIGHT TO USE THE INFORMATION CONTAINED IN THIS DRAWING PURSUANT TO CONTRACT BETWEEN CLIENT AND CALIBRE OPERATIONS PTY. LTD.

ORIGINAL SIZE A1

CARMICHAEL COAL MINE AND RAIL PROJECT
ADANI CLIENT'S ENGINEER - RAIL
CIVIL
GRADE SEPARATED - OCCUPATIONAL CROSSING

MASTER COPY

PROJECT No. CARP12033

DRG No. CARP12033-1000-DWG-C-052

REV 0

NOTES:

1. ALL DIMENSIONS ARE IN METRES UNLESS NOTED OTHERWISE.
2. DRAWING TO BE READ IN CONJUNCTION WITH STANDARD NOTES DRAWING: CARP12033-1000-DWG-G-005.
3. UNDERGROUND UTILITIES / SERVICES ARE TO BE LOCATED PRIOR TO WORKS BEING UNDERTAKEN.
4. HI RAIL ACCESS PAD TO BE GRADED AT 1:100 AWAY FROM RAIL.

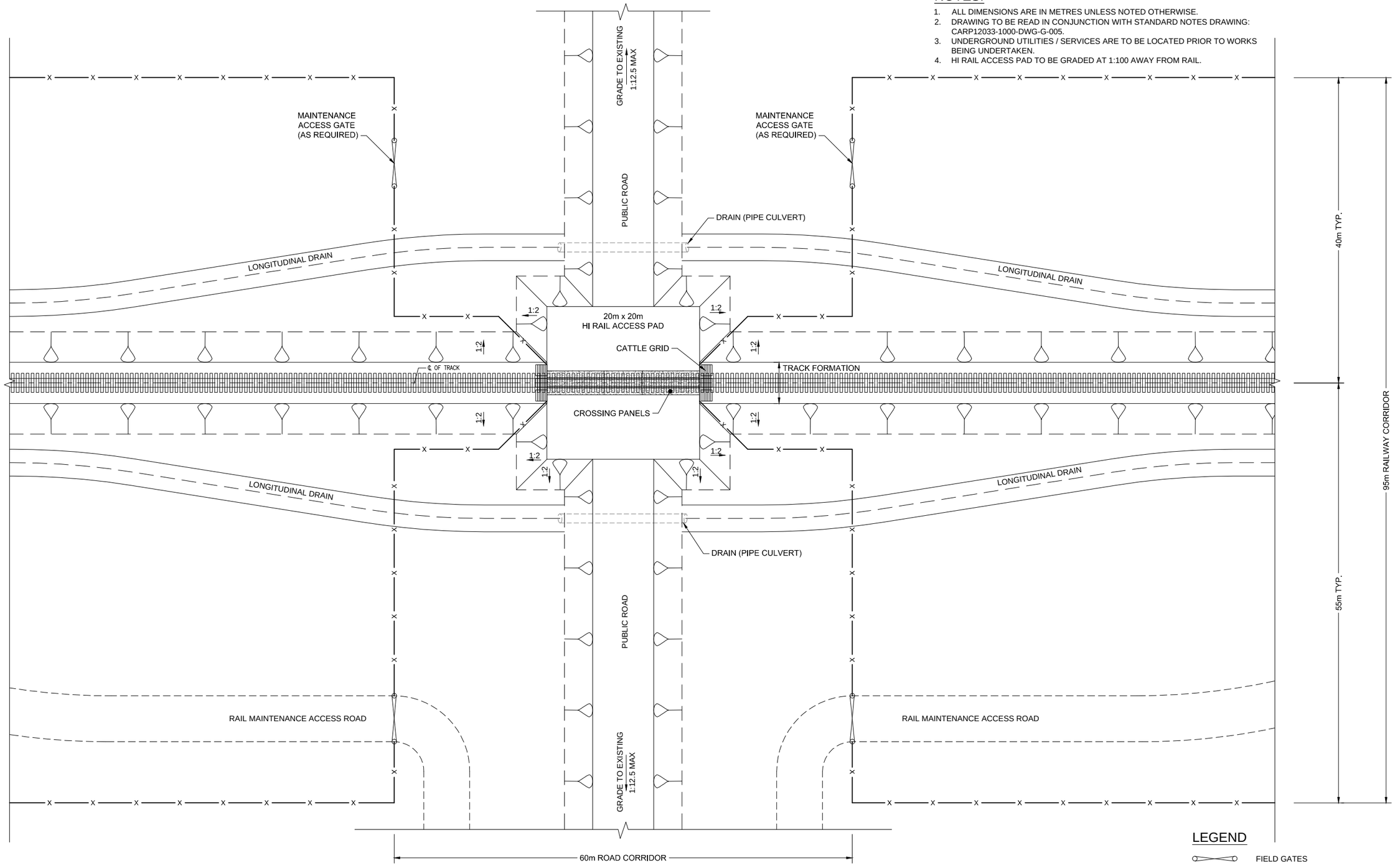

LEGEND

FIELD GATES

FENCING

TYPICAL AT GRADE PUBLIC ROAD CROSSING

SCALE 1:250

NOTE:

RAIL MAINTENANCE ACCESS ROAD AND PUBLIC ROAD INTERFACE TO BE FURTHER INVESTIGATED IN DETAIL DESIGN AND IS SUBJECT TO SIGHT DISTANCE REQUIREMENTS.

0 5 10 15 20 25m

SCALE 1:250

ISSUED FOR USE
NOT FOR CONSTRUCTION

REVISIONS

REV	BY	DATE	DESCRIPTION	CKD	APP
0	PRM	18.12.12	ISSUED FOR USE	DES	SBL

DRAWN	P. McMASTER	18.12.12
DRAFTING CHECK	D. SMITH	18.12.12
ENG. APPROVED	G. BOYTAR	18.12.12
PROJECT MANAGER	S. LOWDEN	18.12.12
RPEQ APPROVAL SIGNED:	R. BROMILOW	18.12.12
NAME:	R. BROMILOW	
RPEQ No:	11073	

calibre
Calibre Operations Pty. Ltd.
Ground Floor, 545 Queen St
Brisbane QLD 4000
Australia
Tel: +61 (0)7 3001 6000
Fax: +61 (0)7 3001 6050

aarvee associates
Aarvee Associates Pty. Ltd.
Suite 39, Level 22, 69 Ann St
Brisbane QLD 4000
Australia
Tel: +61 (0)7 3112 5297
Fax: +61 (0)7 3112 5101

adani™
THIS DRAWING CONTAINS CONFIDENTIAL INFORMATION TO CALIBRE OPERATIONS PTY. LTD. & ITS AFFILIATED PARTIES. THE CLIENT HAS THE RIGHT TO USE THE INFORMATION CONTAINED IN THIS DRAWING PURSUANT TO CONTRACT BETWEEN CLIENT AND CALIBRE OPERATIONS PTY. LTD.

ORIGINAL SIZE A1

CARMICHAEL COAL MINE AND RAIL PROJECT
ADANI CLIENT'S ENGINEER - RAIL
CIVIL
AT GRADE - PUBLIC ROAD CROSSING

MASTER COPY

PROJECT No. CARP12033

DRG No. CARP12033-1000-DWG-C-053

REV 0

NOTES:

1. ALL DIMENSIONS ARE IN METRES UNLESS NOTED OTHERWISE.
2. DRAWING TO BE READ IN CONJUNCTION WITH STANDARD NOTES DRAWING: CARP12033-1000-DWG-G-005.
3. UNDERGROUND UTILITIES / SERVICES ARE TO BE LOCATED PRIOR TO WORKS BEING UNDERTAKEN.
4. HI RAIL ACCESS PAD TO BE GRADED AT 1:100 AWAY FROM RAIL.
5. ROAD SIGNAGE FOR OCCUPATIONAL AND STOCK ROUTE CROSSINGS WILL BE AS PER SPECIFICATION CARP12033-SPE-C-009.

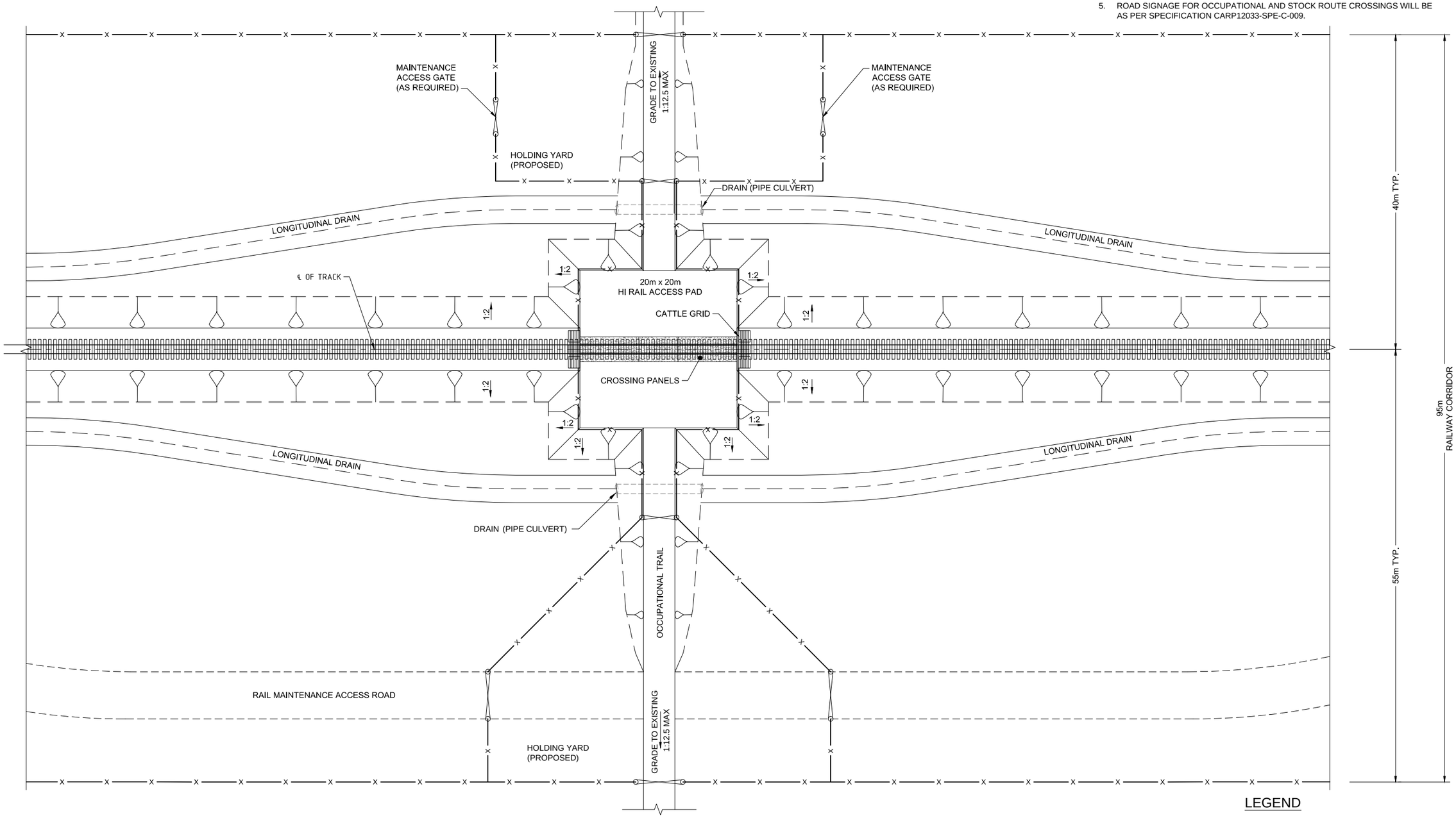

TYPICAL AT GRADE OCCUPATIONAL CROSSING

SCALE 1:250

LEGEND

FIELD GATES

FENCING

0 5 10 15 20 25m

SCALE 1:250

ISSUED FOR USE
NOT FOR CONSTRUCTION

REV	BY	DATE	DESCRIPTION	CKD	APP
0	PRM	18.12.12	ISSUED FOR USE	DES	SBL

REVISIONS

DRAWN	P. McMASTER	18.12.12
DRAFTING CHECK	D. SMITH	18.12.12
ENG. APPROVED	G. BOYTAR	18.12.12
PROJECT MANAGER	S. LOWDEN	18.12.12
RPEQ APPROVAL SIGNED: R. BROMILOW NAME: R. BROMILOW RPEQ No: 11073		18.12.12

calibre
Calibre Operations Pty. Ltd.
Ground Floor, 545 Queen St
Brisbane QLD 4000
Australia
Tel: +61 (0)7 3001 6000
Fax: +61 (0)7 3001 6050

aarvee associates
Aarvee Associates Pty. Ltd.
Suite 39, Level 22, 69 Ann St
Brisbane QLD 4000
Australia
Tel: +61 (0)7 3112 5297
Fax: +61 (0)7 3112 5101

adani™

THIS DRAWING CONTAINS CONFIDENTIAL INFORMATION TO CALIBRE OPERATIONS PTY. LTD. & ITS AFFILIATED PARTIES. THE CLIENT HAS THE RIGHT TO USE THE INFORMATION CONTAINED IN THIS DRAWING PURSUANT TO CONTRACT BETWEEN CLIENT AND CALIBRE OPERATIONS PTY. LTD.

ORIGINAL SIZE A1

CARMICHAEL COAL MINE AND RAIL PROJECT
ADANI CLIENT'S ENGINEER - RAIL
CIVIL
AT GRADE - OCCUPATIONAL CROSSING

MASTER COPY

PROJECT No. CARP12033

DRG No. CARP12033-1000-DWG-C-054

REV 0

NOTES:

1. ALL DIMENSIONS ARE IN METRES UNLESS NOTED OTHERWISE.
2. DRAWING TO BE READ IN CONJUNCTION WITH STANDARD NOTES DRAWING: CARP12033-1000-DWG-G-005.
3. UNDERGROUND UTILITIES / SERVICES ARE TO BE LOCATED PRIOR TO WORKS BEING UNDERTAKEN.
4. HI RAIL ACCESS PAD TO BE GRADED AT 1:100 AWAY FROM RAIL.
5. ROAD SIGNAGE FOR OCCUPATIONAL AND STOCK ROUTE CROSSINGS WILL BE AS PER SPECIFICATION CARP12033-SPE-C-009.

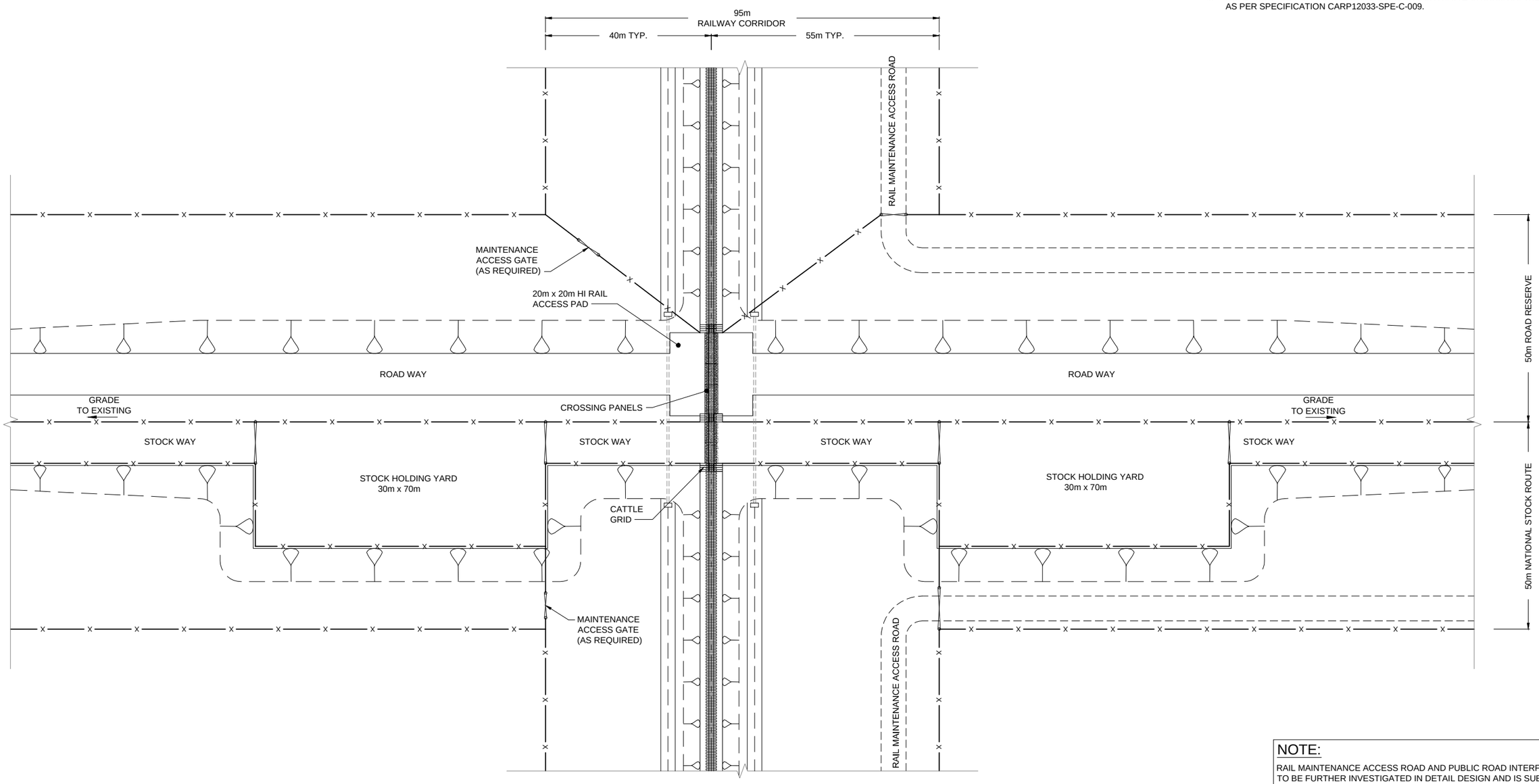

TYPICAL AT GRADE PUBLIC AND STOCK CROSSING

SCALE 1:500

NOTE:

RAIL MAINTENANCE ACCESS ROAD AND PUBLIC ROAD INTERFACE TO BE FURTHER INVESTIGATED IN DETAIL DESIGN AND IS SUBJECT TO SIGHT DISTANCE REQUIREMENTS.

LEGEND

FIELD GATES

—x— FENCING

0 5 10 15 20 25 30 35 40 45 50m

SCALE 1:500

ISSUED FOR USE
NOT FOR CONSTRUCTION

REVISIONS					
0	PRM	18.12.12	ISSUED FOR USE	DES	SBL
REV	BY	DATE	DESCRIPTION	CKD	APP

DRAWN	P. McMASTER	18.12.12
DRAFTING CHECK	D. SMITH	18.12.12
ENG. APPROVED	G. BOYTAR	18.12.12
PROJECT MANAGER	S. LOWDEN	18.12.12
RPEQ APPROVAL SIGNED:	R. BROMILOW	18.12.12
NAME:	R. BROMILOW	
RPEQ No:	11073	

Calibre Operations Pty. Ltd.
Ground Floor, 545 Queen St
Brisbane QLD 4000
Australia
Tel: +61 (0)7 3001 6000
Fax: +61 (0)7 3001 6050

aarvee associates
Aarvee Associates Pty. Ltd.
Suite 39, Level 22, 69 Ann St
Brisbane QLD 4000
Australia
Tel: +61 (0)7 3112 5297
Fax: +61 (0)7 3112 5101

THIS DRAWING CONTAINS CONFIDENTIAL INFORMATION TO CALIBRE OPERATIONS PTY. LTD. & ITS AFFILIATED PARTIES. THE CLIENT HAS THE RIGHT TO USE THE INFORMATION CONTAINED IN THIS DRAWING PURSUANT TO CONTRACT BETWEEN CLIENT AND CALIBRE OPERATIONS PTY. LTD.

ORIGINAL SIZE A1

CARMICHAEL COAL MINE AND RAIL PROJECT
ADANI CLIENT'S ENGINEER - RAIL
CIVIL
AT GRADE - PUBLIC AND STOCK CROSSING

MASTER COPY

PROJECT No. CARP12033

DRG No. CARP12033-1000-DWG-C-055

REV 0

NOTES:

1. ALL DIMENSIONS ARE IN METRES UNLESS NOTED OTHERWISE.
2. DRAWING TO BE READ IN CONJUNCTION WITH STANDARD NOTES DRAWING: CARP12033-1000-DWG-G-005.
3. UNDERGROUND UTILITIES / SERVICES ARE TO BE LOCATED PRIOR TO WORKS BEING UNDERTAKEN.

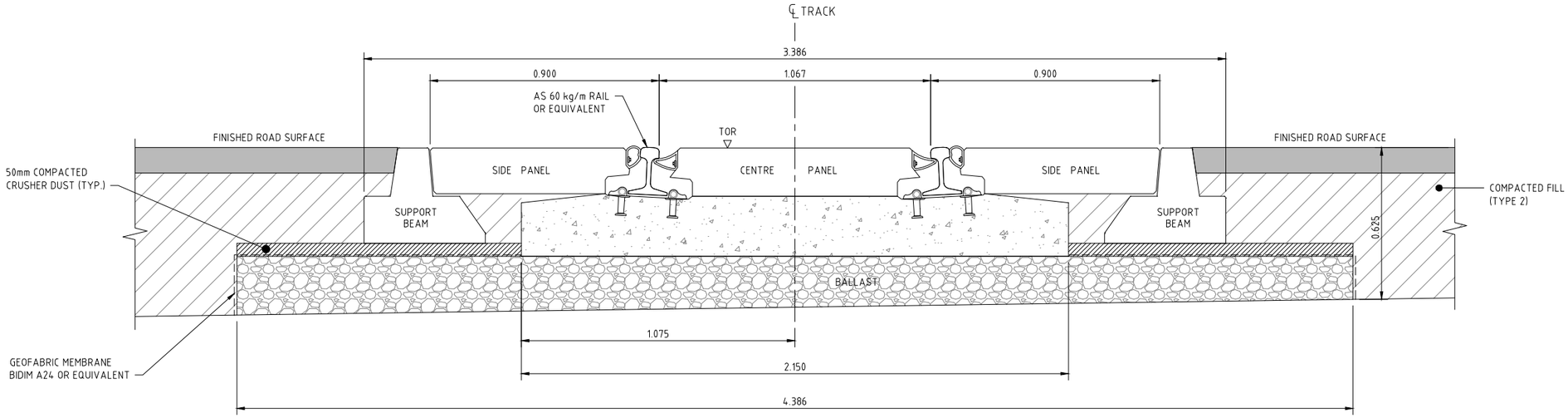

TYPICAL CROSSING PANEL SECTION

SCALE 1:10

0 200 400 600 800 1000mm

SCALE 1:10

ISSUED FOR USE
NOT FOR CONSTRUCTION

REVISIONS					
0	PRM	18.12.12	ISSUED FOR USE	DES	SBL
REV	BY	DATE	DESCRIPTION	CKD	APP

DRAWN	P. McMASTER	18.12.12
DRAFTING CHECK	D. SMITH	18.12.12
ENG. APPROVED	G. BOYTAR	18.12.12
PROJECT MANAGER	S. LOWDEN	18.12.12
RPEQ APPROVAL SIGNED:	R. BROMILOW	18.12.12
NAME:	R. BROMILOW	
RPEQ No:	11073	

calibre
Calibre Operations Pty. Ltd.
Ground Floor, 545 Queen St
Brisbane QLD 4000
Australia
Tel: +61 (0)7 3001 6000
Fax: +61 (0)7 3001 6050

aarvee associates
Aarvee Associates Pty. Ltd.
Suite 39, Level 22, 69 Ann St
Brisbane QLD 4000
Australia
Tel: +61 (0)7 3112 5297
Fax: +61 (0)7 3112 5101

adani™

THIS DRAWING CONTAINS CONFIDENTIAL INFORMATION TO CALIBRE OPERATIONS PTY. LTD. & ITS AFFILIATED PARTIES. THE CLIENT HAS THE RIGHT TO USE THE INFORMATION CONTAINED IN THIS DRAWING PURSUANT TO CONTRACT BETWEEN CLIENT AND CALIBRE OPERATIONS PTY. LTD.

ORIGINAL SIZE A1

CARMICHAEL COAL MINE AND RAIL PROJECT
ADANI CLIENT'S ENGINEER - RAIL
CIVIL
TYPICAL CROSSING PANEL DETAIL

MASTER COPY

PROJECT No. CARP12033

DRG No. CARP12033-1000-DWG-C-057

REV 0

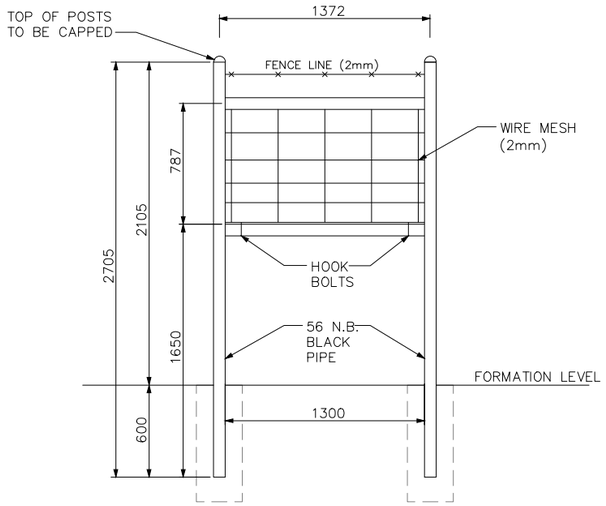

WING FENCE

SCALE 1:20

No REQUIRED: 2 OFF PER CROSSING

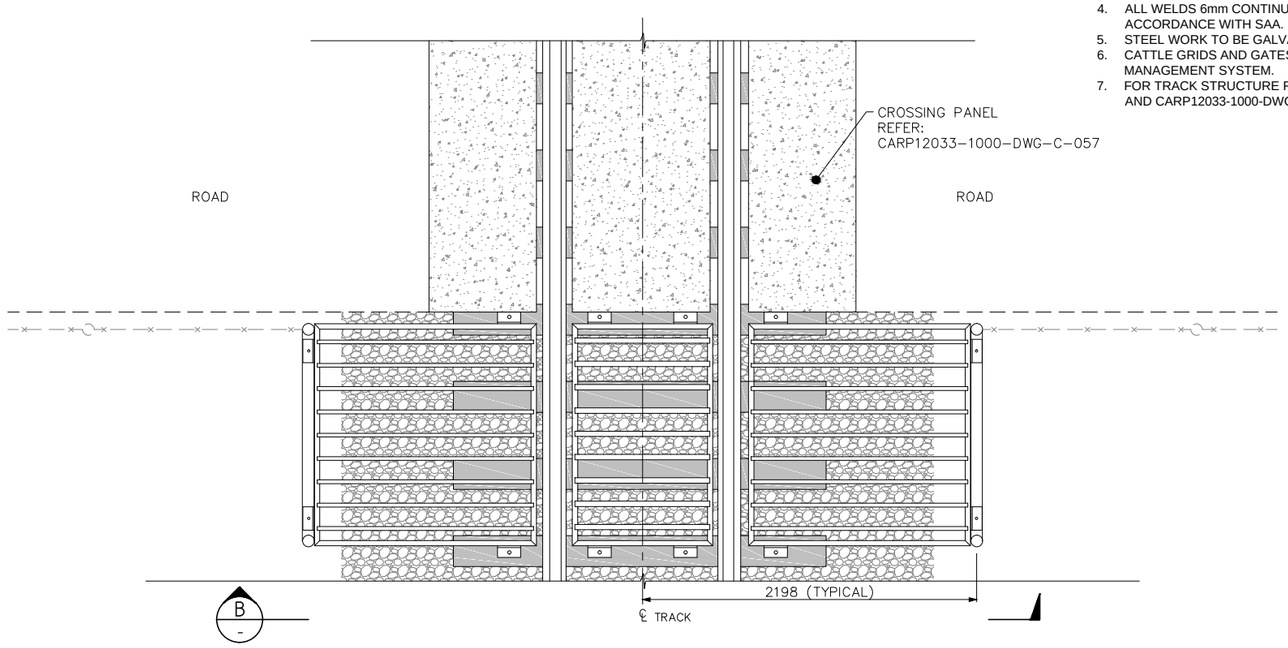

CATTLE GRID - RAIL CROSSING PLAN

SCALE 1:20

NOTES:

1. ALL DIMENSIONS IN MILLIMETERS UNLESS NOTED OTHERWISE.
2. ALL TUBES TO BE 32mm NOMINAL BORE BLACK PIPE. EXCEPT WHERE NOTED.
3. ALL CROSS BARS AND BRACKETS TO BE CONTINOUS FILLET WELD TO FRAMES.
4. ALL WELDS 6mm CONTINUOUS FILLET, UNLESS NOTED OTHERWISE AND IN ACCORDANCE WITH SAA. INTERIM CODE 352.
5. STEEL WORK TO BE GALVANISED AFTER FABRICATION.
6. CATTLE GRIDS AND GATES TO BE INSTALLED AS PER THE RAILWAY SAFETY MANAGEMENT SYSTEM.
7. FOR TRACK STRUCTURE REFER TO DRAWING CARP12033-1000-DWG-L-021 AND CARP12033-1000-DWG-L-022.

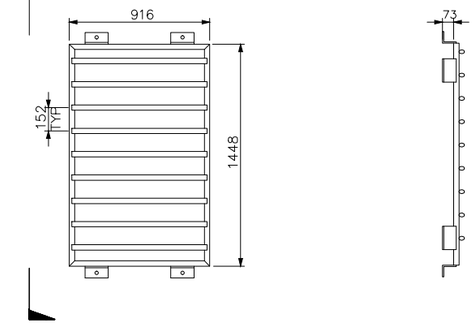

CATTLE GRID - CENTRE GRID DETAIL

SCALE 1:20

No REQUIRED: 1 OFF PER CROSSING

ELEVATION C

SCALE 1:20

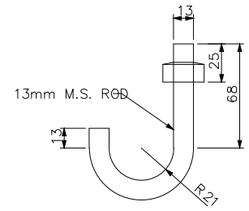

HOOK BOLT

SCALE 1:2

No REQUIRED: 4 OFF PER CROSSING

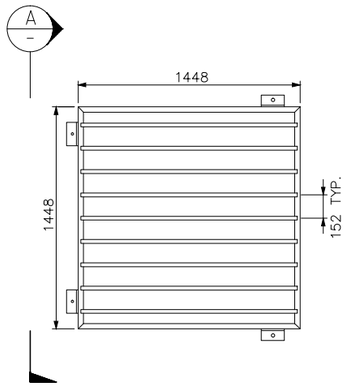

CATTLE GRID - WING GRID DETAIL

SCALE 1:20

No REQUIRED: 2 OFF PER CROSSING
(1 OFF, AS DRAWN-LEFT HAND)
(1 OFF, RIGHT HAND)

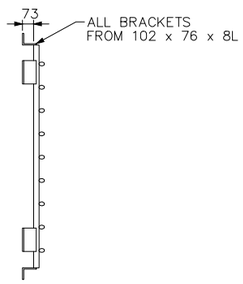

ELEVATION A

SCALE 1:20

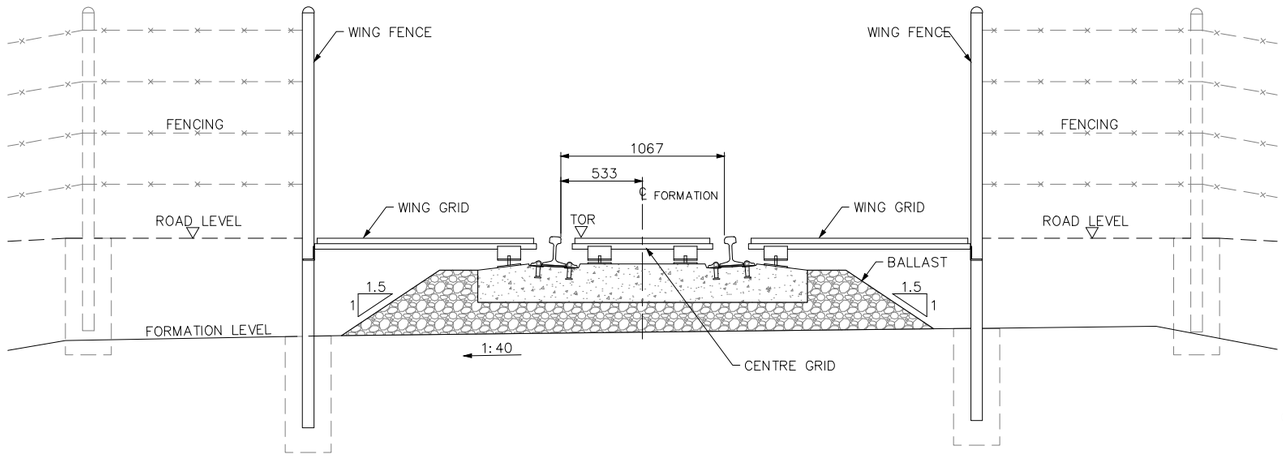

ELEVATION B

SCALE 1:20

0 40 80 120 160 200mm

SCALE 1:2

0 400 800 1200 1600 2000mm

SCALE 1:20

ISSUED FOR USE
NOT FOR CONSTRUCTION

REVISIONS					
0	PRM	18.12.12	ISSUED FOR USE	DES	SBL
REV	BY	DATE	DESCRIPTION	CKD	APP

DRAWN	P. McMASTER	18.12.12
DRAFTING CHECK	D. SMITH	18.12.12
ENG. APPROVED	G. BOYTAR	18.12.12
PROJECT MANAGER	S. LOWDEN	18.12.12
RPEQ APPROVAL SIGNED:	R. BROMILOW	18.12.12
NAME:	R. BROMILOW	
RPEQ No:	11073	

calibre
Calibre Operations Pty. Ltd.
Ground Floor, 545 Queen St
Brisbane QLD 4000
Australia
Tel: +61 (0)7 3001 6000
Fax: +61 (0)7 3001 6050

aarvee associates
Aarvee Associates Pty. Ltd.
Suite 39, Level 22, 69 Ann St
Brisbane QLD 4000
Australia
Tel: +61 (0)7 3112 5297
Fax: +61 (0)7 3112 5101

adani™

THIS DRAWING CONTAINS CONFIDENTIAL INFORMATION TO CALIBRE OPERATIONS PTY. LTD. & ITS AFFILIATED PARTIES. THE CLIENT HAS THE RIGHT TO USE THE INFORMATION CONTAINED IN THIS DRAWING PURSUANT TO CONTRACT BETWEEN CLIENT AND CALIBRE OPERATIONS PTY. LTD.

ORIGINAL SIZE A1

CARMICHAEL COAL MINE AND RAIL PROJECT
ADANI CLIENT'S ENGINEER - RAIL
CIVIL
TYPICAL CATTLE GRID DETAILS

MASTER COPY

PROJECT No. CARP12033

DRG No. CARP12033-1000-DWG-C-060

REV 0

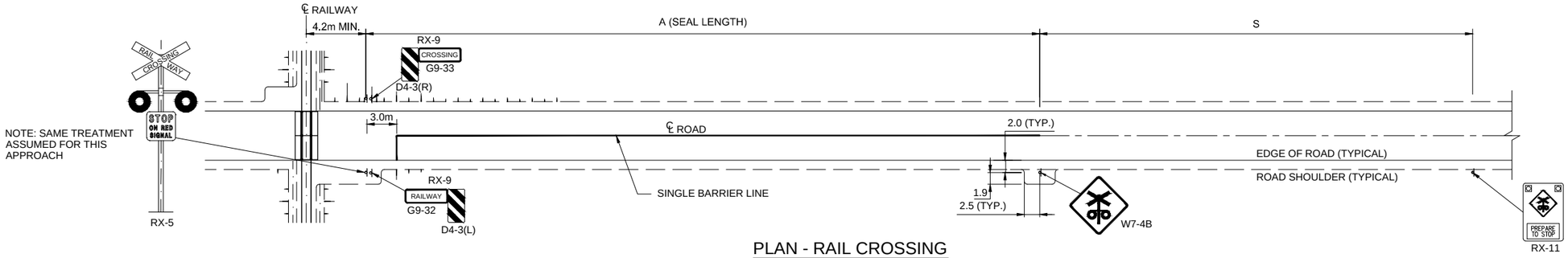

PLAN - RAIL CROSSING CONTROLLED BY FLASHING LIGHTS (ACTIVE)

(SIGNAGE ON LEFT SIDE OF ROAD)
N.T.S.

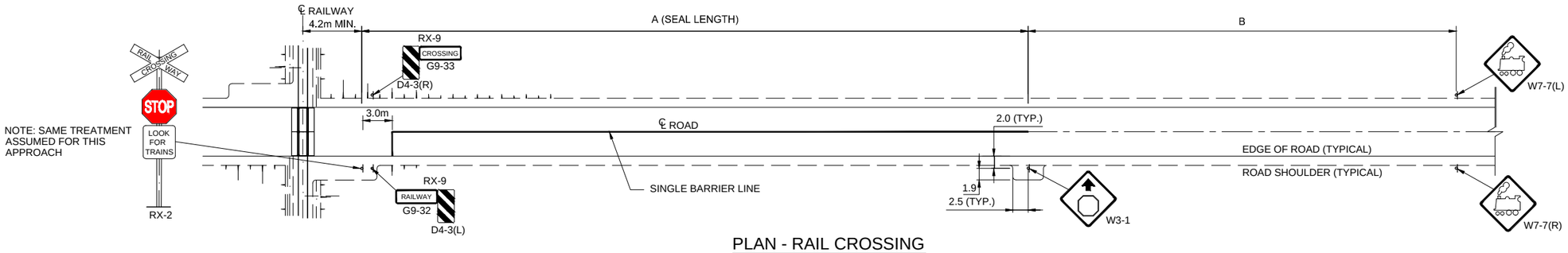

PLAN - RAIL CROSSING CONTROLLED BY STOP SIGNS (PASSIVE)

(SIGNAGE ON LEFT SIDE OF ROAD)
N.T.S.

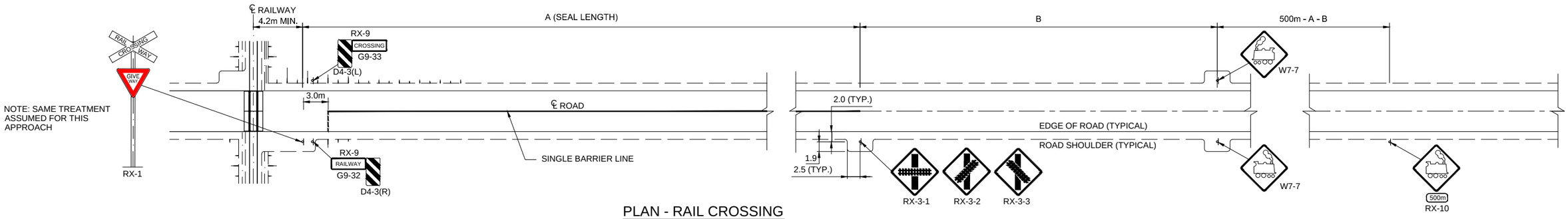

PLAN - RAIL CROSSING CONTROLLED BY GIVE WAY SIGNS (PASSIVE)

(SIGNAGE ON LEFT SIDE OF ROAD)
N.T.S.

ACTIVE ADVANCE WARNING ASSEMBLY (S)

METRES

VEHICLE SPEED km/h	GRADE -8%	-6%	-4%	-2%	LEVEL	2%	4%	6%	8%
<65	165	137	117	102	91	82	63	69	64
65-75	217	178	151	131	116	104	94	86	80
76-85	275	224	189	163	143	127	115	104	96
86-95	340	275	231	198	173	153	136	124	113
96-105	416	336	281	241	210	186	166	150	136
>105	508	412	345	296	259	229	206	186	169

SIGNAGE DISTANCE AS PER ROAD SPEED

V_{85} (km/h)	A (m)	B (m)
<70	80-120	50
75-90	120-180	60
>90	180-250	70

SIGNAGE NOTES:

1. FOR SIDE ACCESS ROADS USE RX-4 ASSEMBLY (W7-12/13)

NOTES:

1. ALL DIMENSIONS IN METRES UNLESS NOTED OTHERWISE.
2. ALL SIGNS AND ROAD MARKINGS SHALL BE IN ACCORDANCE WITH THE FOLLOWING PARTS OF AS 1742 MANUAL OF UNIFORM TRAFFIC CONTROL DEVICES :
   AS 1742.1 (PART 1) GENERAL INTRODUCTION AND INDEX OF SIGNS.
   AS 1742.2 (PART 2) TRAFFIC CONTROL DEVICES FOR GENERAL USE.
   AS 1742.7 (PART 7) RAILWAY CROSSINGS.

ISSUED FOR USE
NOT FOR CONSTRUCTION

REVISIONS

REV	BY	DATE	DESCRIPTION	CKD	APP
0	PRM	18.12.12	ISSUED FOR USE	DES	SBL

DRAWN	P. McMASTER	18.12.12
DRAFTING CHECK	D. SMITH	18.12.12
ENG. APPROVED	G. BOYTAR	18.12.12
PROJECT MANAGER	S. LOWDEN	18.12.12
RPEQ APPROVAL SIGNED: R. BROMILOW NAME: R. BROMILOW RPEQ No: 11073		18.12.12

calibre
Calibre Operations Pty. Ltd.
Ground Floor, 545 Queen St
Brisbane QLD 4000
Australia
Tel: +61 (0)7 3001 6000
Fax: +61 (0)7 3001 6050

aarvee associates
Aarvee Associates Pty. Ltd.
Suite 39, Level 22, 69 Ann St
Brisbane QLD 4000
Australia
Tel: +61 (0)7 3112 5297
Fax: +61 (0)7 3112 5101

adani™
THIS DRAWING CONTAINS CONFIDENTIAL INFORMATION TO CALIBRE OPERATIONS PTY. LTD. & ITS AFFILIATED PARTIES. THE CLIENT HAS THE RIGHT TO USE THE INFORMATION CONTAINED IN THIS DRAWING PURSUANT TO CONTRACT BETWEEN CLIENT AND CALIBRE OPERATIONS PTY. LTD.

ORIGINAL SIZE A1

CARMICHAEL COAL MINE AND RAIL PROJECT
ADANI CLIENT'S ENGINEER - RAIL
CIVIL
TYPICAL RAIL CROSSING SIGNAGE

MASTER COPY

PROJECT No. CARP12033
DRG No. CARP12033-1000-DWG-C-065
REV 0

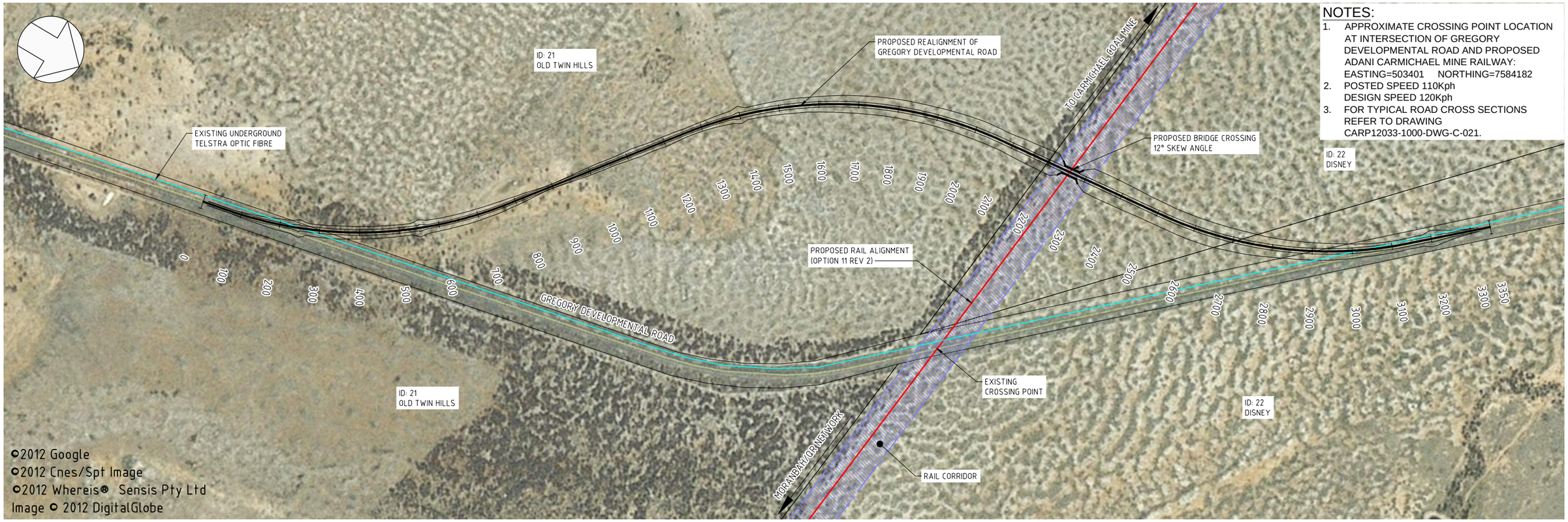

NOTES:

1. APPROXIMATE CROSSING POINT LOCATION AT INTERSECTION OF GREGORY DEVELOPMENTAL ROAD AND PROPOSED ADANI CARMICHAEL MINE RAILWAY: EASTING=503401 NORTHING=7584182
2. POSTED SPEED 110Kph
   DESIGN SPEED 120Kph
3. FOR TYPICAL ROAD CROSS SECTIONS REFER TO DRAWING CARP12033-1000-DWG-C-021.

PLAN

SCALE: 1:5000

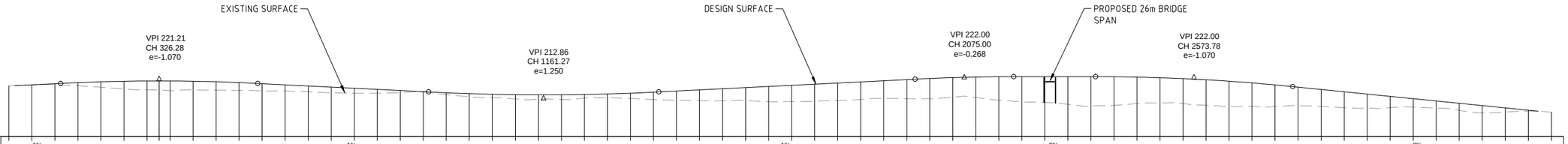

| | | |

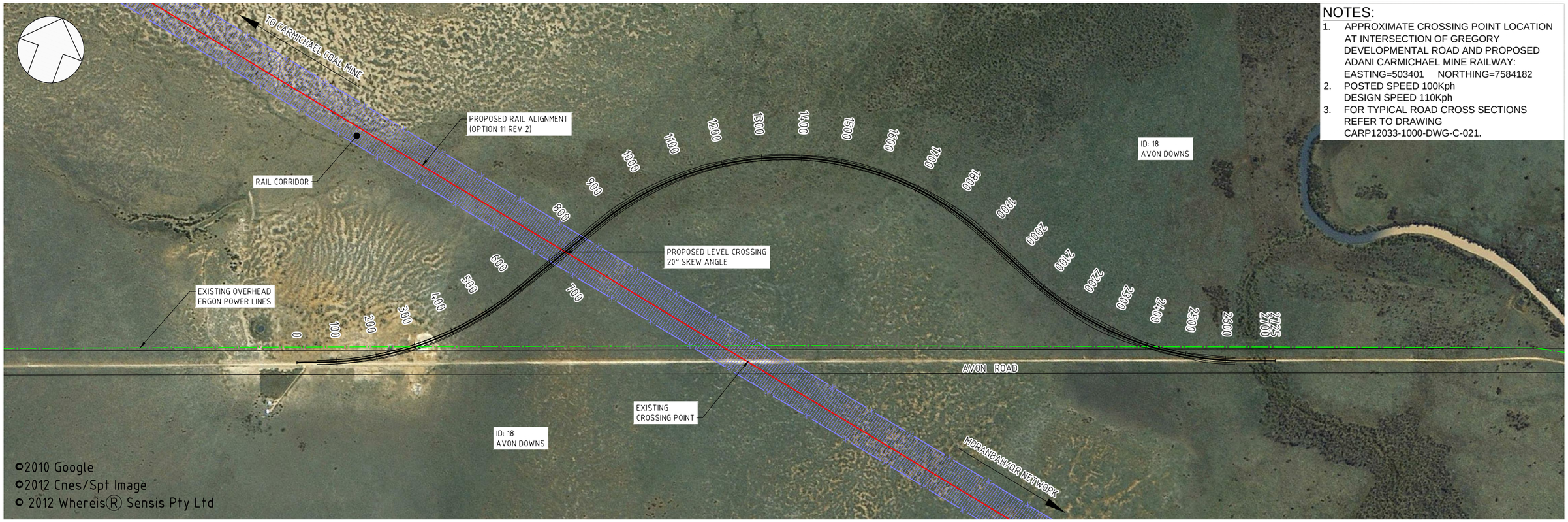

NOTES:

1. APPROXIMATE CROSSING POINT LOCATION AT INTERSECTION OF GREGORY DEVELOPMENTAL ROAD AND PROPOSED ADANI CARMICHAEL MINE RAILWAY: EASTING=503401 NORTHING=7584182
2. POSTED SPEED 100Kph
   DESIGN SPEED 110Kph
3. FOR TYPICAL ROAD CROSS SECTIONS REFER TO DRAWING CARP12033-1000-DWG-C-021.

PLAN

SCALE: 1:5000

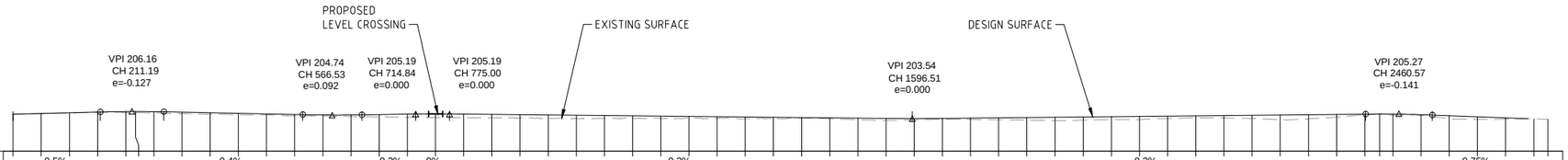

DATUM R.L. 196

| | | |

Drainage Drawings

Carmichael Coal Mine & Rail Project
Front End Engineering Design Report - RAIL

Adani Mining Pty Ltd

CARP12033-REP-G-100 Rev 0
VOLUME 4 - DRAWINGS

calibre

aarvee associates

adani

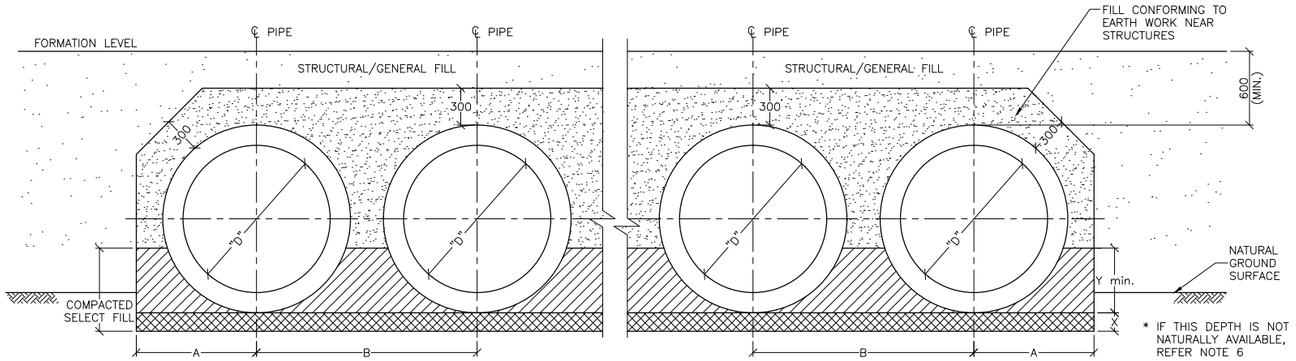

MULTIPLE PIPES TYPE H2 SUPPORT

SCALE 1:25

"D"	Y min.	A	B	X
(mm)	(mm)	(mm)	(mm)	(mm)
900	313	815	1500	100
1200	410	980	1800	150
1500	507	1185	2250	150

GENERAL NOTES :

1. ALL DIMENSIONS ARE IN MILLIMETRES UNLESS NOTED OTHERWISE.
2. ALL REINFORCED CONCRETE PIPES TO BE FLUSH JOINTED.
3. UNSUITABLE MATERIAL BELOW BASE SLAB OR BEDDING LAYER AND WINGWALL BASES OF ALL CULVERTS SHALL BE REMOVED AND REPLACED WITH SELECTED BACKFILL COMPACTED TO 90% MODIFIED COMPACTION. DEPTH OF REMOVAL AND REPLACEMENT SHALL BE 1 METRE.
4. NO CONSTRUCTION TRAFFIC IS TO PASS OVER CULVERT UNITS UNTIL A MINIMUM COVER OF 600mm HAS BEEN PLACED.
5. ALL CULVERT SETOUT DETAILS AND FLOWPATHS TO BE CONFIRMED BY THE SITE ENGINEER PRIOR TO CONSTRUCTION.
6. THE INVERT OF PIPE SHALL TIE IN SMOOTHLY TO NATURAL OR STRIPPED SURFACE LEVEL (WHICH EVER IS LOWER)
7. FILL CONFORMING TO EARTH WORK NEAR STRUCTURES SHALL BE
   - GRANULAR MATERIAL HAVING A MINIMUM DIMENSIONS NO EXCEEDING 50mm
   - NOT MORE THAN 5% BY MASS PASSES THE 9.5mm AS SIEVE.
   - A PLASTICITY INDEX, DETERMINED IN ACCORDANCE WITH AS 1289.3.3.1, NOT LESS THAN 2 AND NOT MORE THAN 12.
8. "D" REFERS TO NOMINAL DIAMETER OF PIPE.
9. FOR ROCK PROTECTION DETAILS REFER DRAWING NO CARP12033-1000-DWG-S-040

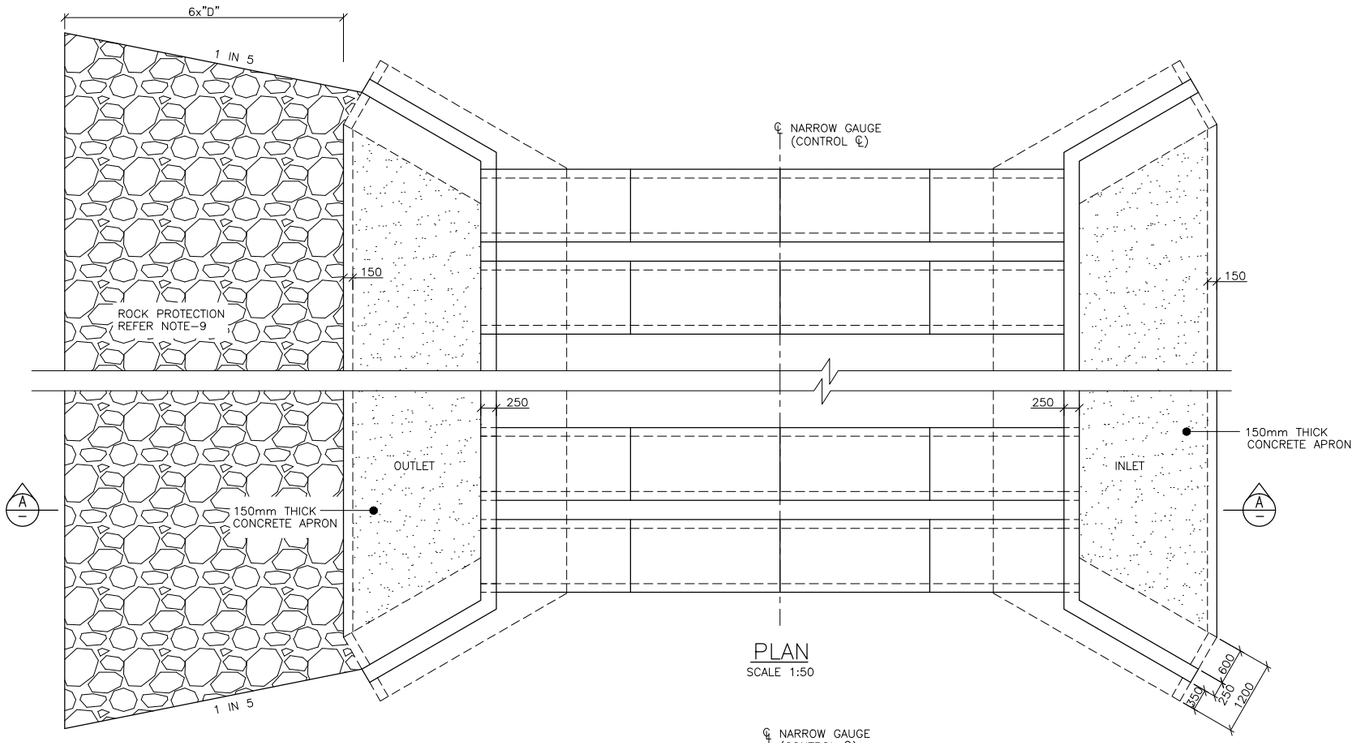

PLAN

SCALE 1:50

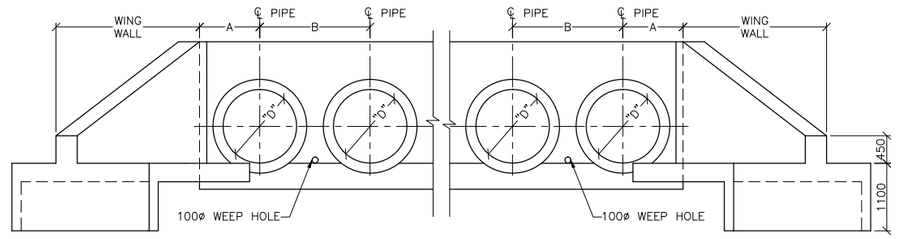

ELEVATION

(APRON OMITTED FOR CLARITY)

SCALE 1:50

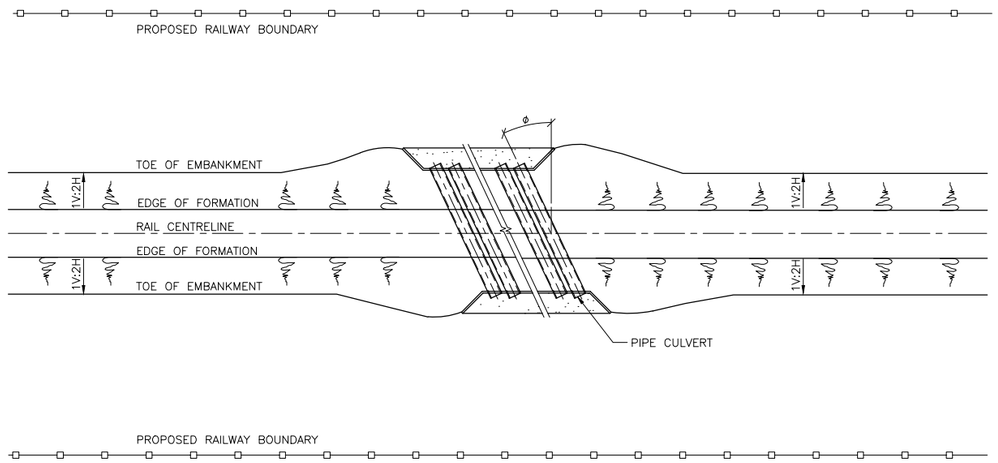

TYPICAL KEY DIAGRAM OF CULVERT PLAN

(N.T.S)

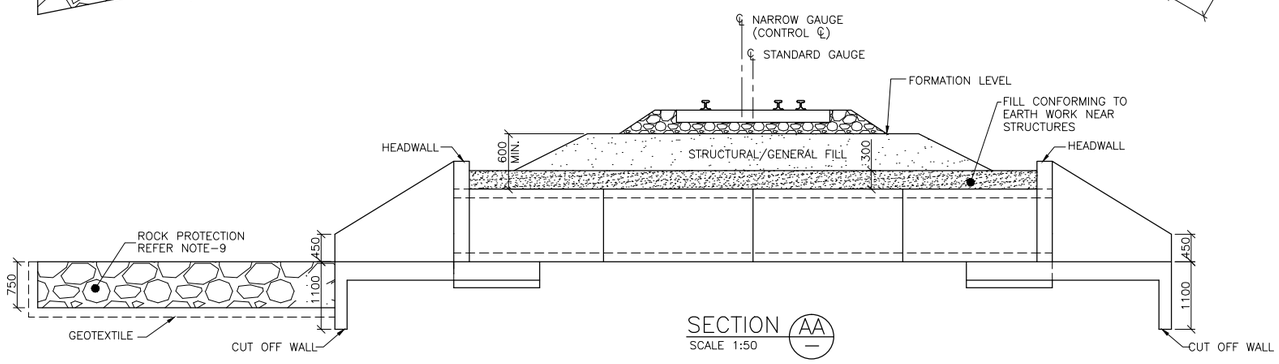

SECTION AA

SCALE 1:50

1 : 50 0 1000 2000mm

1 : 25 0 500 1000mm

ISSUED FOR USE
NOT FOR CONSTRUCTION

REV	BY	DATE	DESCRIPTION	CKD	APP
0	SK	18/12/12	ISSUED FOR USE	DT	RB

REVISIONS

DRAWN	SYAM	18/12/12
DRAFTING CHECK	V RAMESH	18/12/12
ENG. APPROVED	V V RAMAYYA	18/12/12
PROJECT MANAGER	RICHARD BROMILOW	18/12/12
RPEQ APPROVAL SIGNED:	DANIEL TING	18/12/12
NAME:	DANIEL TING	
RPEQ No:	05784	

calibre
Calibre Operations Pty. Ltd.
Ground Floor, 545 Queen St
Brisbane QLD 4000
Australia
Tel: +61 (0)7 3001 6000
Fax: +61 (0)7 3001 6050

aarvee associates
Aarvee Associates Pty. Ltd.
Suite 39, Level 22, 69 Ann St
Brisbane QLD 4000
Australia
Tel: +61 (0)7 3112 5297
Fax: +61 (0)7 3112 5101

adani

THIS DRAWING CONTAINS CONFIDENTIAL INFORMATION TO CALIBRE OPERATIONS PTY. LTD. & ITS AFFILIATED PARTIES. THE CLIENT HAS THE RIGHT TO USE THE INFORMATION CONTAINED IN THIS DRAWING PURSUANT TO CONTRACT BETWEEN CLIENT AND CALIBRE OPERATIONS PTY. LTD.

ORIGINAL SIZE A1

CARMICHAEL COAL MINE AND RAIL PROJECT
ADANI CLIENT'S ENGINEER - RAIL
CIVIL - DRAINAGE
TYPICAL PIPE CULVERT

MASTER COPY

PROJECT No. CARP12033

DRG No. CARP12033-1000-DWG-C-041

REV 0

SEPARABLE PORTION–2

CULVERT NO.	CHAINAGE (m)	TYPE	CULVERT ARRANGEMENT NO.	CULVERT ARRANGEMENT "D" (m)	TRACKS NO.	FORMATION WIDTH (m)	"ø" (DEGREES)	CULVERT LENGTH (m)	SLOPE %	CLASS
C1	2009	RCP	6	0.9	1	5.2	26.9	7.32	0.3	CLASS 6
C2	3866	RCP	17	1.2	1	5.2	7.9	19.52	0.3	CLASS 6
C3	7049	RCP	25	1.5	1	5.2	41.5	21.96	0.3	CLASS 6
C4	7440	RCP	9	0.9	1	5.2	31.7	21.96	0.3	CLASS 6
C5	7500	RCP	7	0.9	1	5.2	10.1	19.52	0.3	CLASS 6
C6	8688	RCP	18	0.9	1	5.2	1.4	17.08	0.3	CLASS 6
C7	9749	RCP	7	0.9	1	5.2	3.4	19.52	0.3	CLASS 6
C8	10217	RCP	8	1.5	1	5.2	31.2	14.64	0.1	CLASS 6
C9	13604	RCP	18	0.9	1	5.2	40.5	12.20	0.59	CLASS 6
C10	16285	RCP	46	1.2	1	5.2	40.5	12.20	0.3	CLASS 6
C11	17553	RCP	18	1.2	1	5.2	1.2	12.20	0.13	CLASS 6
C12	18433	RCP	72	1.5	1	5.2	1.7	9.76	0.3	CLASS 6
C13	18671	RCP	19	1.5	1	5.2	69.7	26.84	0.3	CLASS 6
C14	20154	RCP	35	1.2	1	5.2	8.7	9.76	0.24	CLASS 6
C15	21483	RCP	35	0.9	1	5.2	5.4	9.76	0.24	CLASS 6
C16	23076	RCP	36	1.2	1	5.2	33.2	17.08	0.29	CLASS 6
C17	23681	RCP	4	0.9	1	5.2	14.4	9.76	0.28	CLASS 6
C18	25118	RCP	34	0.9	1	5.2	1.2	9.76	0.24	CLASS 6
C19	27163	RCP	24	1.2	1	5.2	26.5	12.2	0.14	CLASS 6
C20	27658	RCP	16	1.2	1	5.2	13.5	12.2	0.14	CLASS 6
C21	31313	RCP	28	0.9	1	5.2	24.1	9.76	0.3	CLASS 6
C22	32733	RCP	45	0.9	1	5.2	9.4	12.20	0.4	CLASS 6
C23	34468	RCP	17	0.9	2	11.2	24.1	17.08	0.25	CLASS 6
C24	35609	RCP	12	0.9	2	11.2	9.4	14.64	0.4	CLASS 6
C25	37880	RCP	12	0.9	1	5.2	50.4	12.2	0.3	CLASS 6
C26	38555	RCP	10	0.9	1	5.2	18.3	7.32	0.4	CLASS 6
C27	39497	RCP	25	0.9	1	5.2	9.3	9.76	0.57	CLASS 6
C28	40934	RCP	5	0.9	1	5.2	0.9	9.76	0.28	CLASS 6
C29	41440	RCP	6	0.9	1	5.2	17.8	9.76	0.33	CLASS 6
C30	43932	RCP	18	0.9	1	5.2	75.8	95.16	0.3	CLASS 6
C31	45969	RCP	35	1.2	1	5.2	26.3	9.76	0.1	CLASS 6
C32	47211	RCP	16	1.2	1	5.2	9.8	9.76	0.19	CLASS 6
C33	48441	RCP	33	1.2	1	5.2	27.0	12.2	0.1	CLASS 6
C34	50662	RCP	60	1.2	1	5.2	22.7	9.76	0.17	CLASS 6
C35	51899	RCP	11	0.9	1	5.2	12.3	9.76	0.27	CLASS 6
C36	52719	RCP	13	0.9	1	5.2	4.1	9.76	0.15	CLASS 6
C37	55447	RCP	15	0.9	1	5.2	63.7	19.52	0.2	CLASS 6
C38	56656	RCP	20	0.9	1	5.2	24.5	9.76	0.5	CLASS 6
C39	62364	RCP	55	1.5	1	5.2	0.0	17.08	0.1	CLASS 6
C40	63942	RCP	20	1.5	1	5.2	0.0	14.64	0.2	CLASS 6

SEPARABLE PORTION–1

CULVERT NO.	CHAINAGE (m)	TYPE	CULVERT ARRANGEMENT NO.	CULVERT ARRANGEMENT "D" (m)	TRACKS NO.	FORMATION WIDTH (m)	"ø" (DEGREES)	CULVERT LENGTH (m)	SLOPE %	CLASS
C41	66259	RCP	50	1.2	1	5.2	0.7	12.20	0.1	CLASS 6
C42	67238	RCP	31	1.2	1	5.2	9.2	51.24	0.1	CLASS 6
C43	70119	RCP	43	1.2	1	5.2	1.1	9.76	0.1	CLASS 6
C44	73284	RCP	50	1.2	2	11.4	0.0	17.08	0.1	CLASS 6
C45	73526	RCP	40	1.2	2	11.4	5.1	17.08	0.1	CLASS 6
C46	76943	RCP	43	1.2	1	5.4	28.4	9.76	0.14	CLASS 6
C47	77691	RCP	37	1.2	1	5.4	45.5	12.20	0.1	CLASS 6
C48	79319	RCP	28	1.2	1	5.4	35.5	12.20	0.1	CLASS 6
C49	81642	RCP	18	1.2	1	5.4	19.4	9.76	0.1	CLASS 6
C50	83758	RCP	80	1.5	1	5.4	52.1	19.52	0.1	CLASS 6
C51	84560	RCP	40	0.9	1	5.4	0.0	9.76	–	CLASS 6
C52	86307	RCP	10	0.9	1	5.4	0.0	14.64	–	CLASS 6
C53	86810	RCP	15	1.2	1	5.4	32.7	17.08	0.1	CLASS 6
C54	87701	RCP	52	1.2	1	5.4	3.9	9.76	0.16	CLASS 6
C55	90598	RCP	8	1.2	1	5.4	0.0	17.08	–	CLASS 6
C56	90845	RCP	8	1.2	1	5.4	0.0	14.64	–	CLASS 6
C57	91500	RCP	36	1.2	1	5.4	26.1	12.20	0.258	CLASS 6
C58	93444	RCP	15	0.9	1	5.4	9.7	24.40	0.738	CLASS 6
C59	94099	RCP	18	0.9	1	5.4	6.1	24.40	0.497	CLASS 6
C60	94705	RCP	10	1.2	1	5.4	35.6	24.40	0.517	CLASS 6
C61	95911	RCP	11	1.2	1	5.4	26.8	17.08	0.559	CLASS 6
C62	98021	RCP	18	1.2	1	5.4	24.7	9.76	0.355	CLASS 6
C63	98066	RCP	7	1.2	1	5.4	0.0	7.32	0.355	CLASS 6
C64	100181	RCP	16	1.2	1	5.4	29.0	12.20	0.371	CLASS 6
C65	100490	RCP	13	1.2	1	5.4	1.6	7.32	0.371	CLASS 6
C66	100759	RCP	9	1.2	1	5.4	68.1	24.40	0.371	CLASS 6
C67	102983	RCP	21	1.2	1	5.4	31.2	14.64	0.370	CLASS 6
C68	103132	RCP	5	1.2	1	5.4	16.2	9.76	0.370	CLASS 6
C69	104326	RCP	30	1.2	1	5.4	41.5	21.96	0.296	CLASS 6
C70	105272	RCP	13	0.9	1	5.4	8.9	14.64	0.988	CLASS 6
C71	106851	RCP	13	1.2	1	5.4	62.9	17.08	0.270	CLASS 6
C72	110045	RCP	25	1.2	1	5.4	20.2	17.08	0.311	CLASS 6
C73	110648	RCP	33	1.5	1	5.4	4.4	14.64	0.152	CLASS 6
C74	113926	RCP	30	1.2	1	5.4	0.0	14.64	–	CLASS 6
C75	114310	RCP	20	1.2	1	5.4	0.0	12.20	–	CLASS 6
C76	118977	RCP	40	1.2	1	5.4	82.9	82.96	–	CLASS 6
C77	119323	RCP	10	1.2	1	5.4	0.0	9.76	–	CLASS 6
C78	120600	RCP	23	1.2	1	5.4	0.0	17.08	–	CLASS 6
C79	121260	RCP	8	1.5	1	5.4	0.0	21.96	–	CLASS 6
C80	122145	RCP	95	1.2	1	5.4	53.6	29.28	–	CLASS 6
C81	122403	RCP	30	1.5	1	5.4	28.7	12.20	0.1	CLASS 6
C82	123642	RCP	30	1.2	1	5.4	17.1	9.76	0.456	CLASS 6
C83	124144	RCP	34	1.2	1	5.4	4.4	12.20	0.624	CLASS 6
C84	127354	RCP	65	1.2	1	5.4	59.7	19.52	0.13	CLASS 6
C85	133736	RCP	42	1.2	1	5.4	37.0	17.08	0.13	CLASS 6
C86	136718	RCP	28	0.9	1	5.4	26.4	14.64	0.1	CLASS 6
C87	139221	RCP	50	1.5	1	5.4	31.7	21.96	–	CLASS 6
C88	159225	RCP	37	1.2	1	5.4	7.9	12.20	0.442	CLASS 6
C89	162022	RCP	24	1.2	1	5.4	36.7	12.20	0.56	CLASS 6
C90	163895	RCP	27	1.2	1	5.4	2.6	9.76	0.246	CLASS 6
C91	167482	RCP	15	1.2	1	5.4	0.0	9.76	–	CLASS 6
C92	168085	RCP	13	1.2	1	5.4	0.0	12.20	–	CLASS 6
C93	168758	RCP	20	1.2	1	5.4	0.0	9.76	–	CLASS 6
C94	169257	RCP	18	1.2	1	5.4	0.0	9.76	–	CLASS 6
C95	171593	RCP	40	1.5	1	5.4	41.4	12.20	0.1	CLASS 6
C96	173053	RCP	35	1.2	1	5.4	42.1	12.20	0.137	CLASS 6
C97	175338	RCP	10	1.2	2	11.4	0.0	21.96	–	CLASS 6
C98	176523	RCP	5	1.2	2	11.4	0.0	21.96	–	CLASS 6
C99	177485	RCP	39	1.2	1	5.4	40.1	14.64	–	CLASS 6
C100	177950	RCP	13	1.2	1	5.4	48.4	14.64	–	CLASS 6
C101	181551	RCP	44	1.2	1	5.4	47.8	14.64	–	CLASS 6

NOTE:–

1. CULVERT LENGTH MAY CHANGE SUBJECTED TO BATTERED SLOPE OF EMBANKMENT.
2. "D" REFERS TO NOMINAL DIAMETER OF PIPE.
3. "ø" REFERS TO ANGLE BETWEEN THE DIRECTION OF THE WATER FLOW AND THE TRANSVERSE CENTRE–LINE OF THE TRACK.
4. PROPOSED ALIGNMENT (30mtpa) IS USED FOR CALCULATING CULVERT LENGTH.

ISSUED FOR USE
NOT FOR CONSTRUCTION

REVISIONS

REV	BY	DATE	DESCRIPTION	CKD	APP
0	SK	19/12/12	ISSUED FOR USE	DT	RB

DRAWN	SYAM	19/12/12
DRAFTING CHECK	V RAMESH	19/12/12
ENG. APPROVED	A N KESKAR	19/12/12
PROJECT MANAGER	RICHARD BROMILOW	19/12/12
RPEQ APPROVAL SIGNED:	DANIEL TING	19/12/12
NAME:	DANIEL TING	
RPEQ No:	05784	

calibre
Calibre Operations Pty. Ltd.
Ground Floor, 545 Queen St
Brisbane QLD 4000
Australia
Tel: +61 (0)7 3001 6000
Fax: +61 (0)7 3001 6050

aarvee associates
Aarvee Associates Pty. Ltd.
Suite 39, Level 22, 69 Ann St
Brisbane QLD 4000
Australia
Tel: +61 (0)7 3112 5297
Fax: +61 (0)7 3112 5101

adani™
THIS DRAWING CONTAINS CONFIDENTIAL INFORMATION TO CALIBRE OPERATIONS PTY. LTD. & ITS AFFILIATED PARTIES. THE CLIENT HAS THE RIGHT TO USE THE INFORMATION CONTAINED IN THIS DRAWING PURSUANT TO CONTRACT BETWEEN CLIENT AND CALIBRE OPERATIONS PTY. LTD.

ORIGINAL SIZE A1

CARMICHAEL COAL MINE AND RAIL PROJECT
ADANI CLIENT'S ENGINEER - RAIL
CIVIL - DRAINAGE
CULVERT SCHEDULE

MASTER COPY

PROJECT No. CARP12033

DRG No. CARP12033-1000-DWG-C-091

REV 0

Structural Drawings

Carmichael Coal Mine & Rail Project
Front End Engineering Design Report - RAIL

Adani Mining Pty Ltd

CARP12033-REP-G-100 Rev 0
VOLUME 4 - DRAWINGS

calibre

aarvee associates

adani

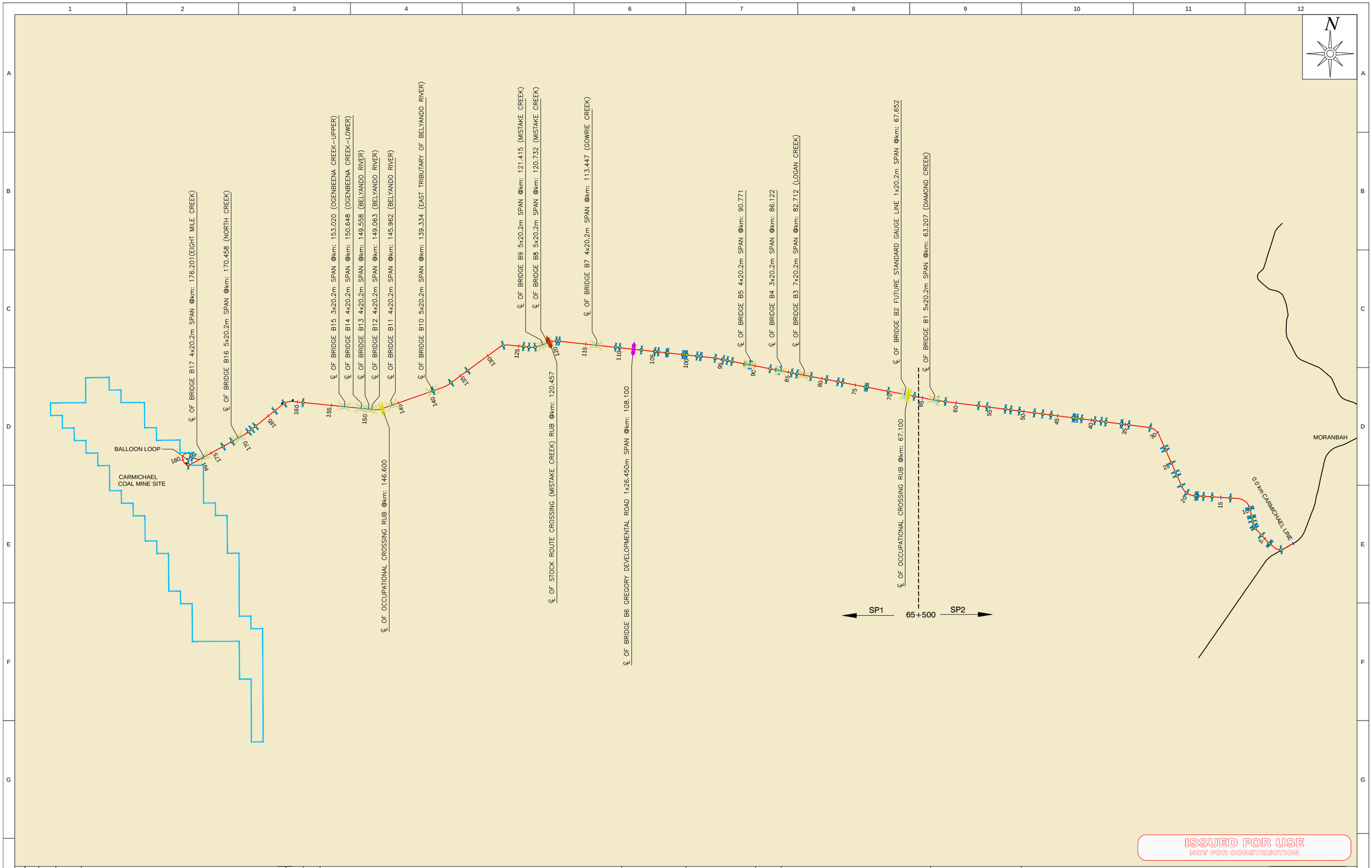

REV	BY	DATE	DESCRIPTION	CKD	APP
0	SK	18/12/12	ISSUED FOR USE	RA	RB

REVISIONS

LEGEND:-

- EXISTING ALIGNMENT
- PROPOSED ALIGNMENT
- CARMICHAEL COAL-MINE SITE
- RAILWAY BRIDGE
- PIPE CULVERT
- OCCUPATIONAL CROSSING (UNDER PASS)
- STOCK ROUTE CROSSING (RAIL OVER ROAD)
- ROAD CROSSING (ROAD OVER RAIL)

DRAWN	SYAM	18/12/12
DRAFTING CHECK	V RAMESH	18/12/12
ENG. APPROVED	P V S SARMA	18/12/12
PROJECT MANAGER	RICHARD BROMILOW	18/12/12
RPEQ APPROVAL SIGNED:	RUPESH ABBEY	18/12/12
NAME:	RUPESH ABBEY	
RPEQ No:	09126	

calibre
Calibre Operations Pty. Ltd.
Ground Floor, 545 Queen St
Brisbane QLD 4000
Australia
Tel: +61 (0)7 3001 6000
Fax: +61 (0)7 3001 6050

aarvee associates
Aarvee Associates Pty. Ltd.
Suite 39, Level 22, 69 Ann St
Brisbane QLD 4000
Australia
Tel: +61 (0)7 3112 5297
Fax: +61 (0)7 3112 5101

adani™

THIS DRAWING CONTAINS CONFIDENTIAL INFORMATION TO CALIBRE OPERATIONS PTY. LTD. & ITS AFFILIATED PARTIES. THE CLIENT HAS THE RIGHT TO USE THE INFORMATION CONTAINED IN THIS DRAWING PURSUANT TO CONTRACT BETWEEN CLIENT AND CALIBRE OPERATIONS PTY. LTD.

ORIGINAL SIZE A1

CARMICHAEL COAL MINE AND RAIL PROJECT
ADANI CLIENT'S ENGINEER - RAIL
CIVIL - RAIL
SCHEMATIC - SP1 AND SP2 LINE

MASTER COPY

PROJECT No. CARP12033

DRG No. CARP12033-1000-DWG-G-010

REV 0

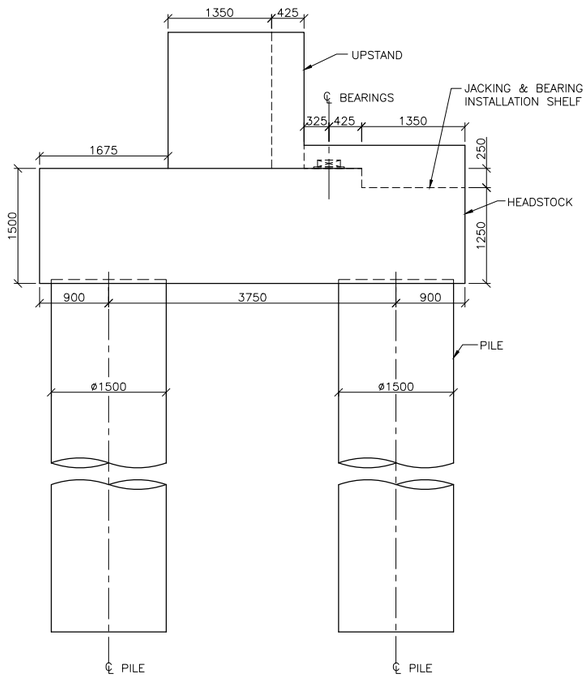

TYPICAL ELEVATION OF ABUTMENT

(LONGITUDINAL DIRECTION)
SCALE 1:40

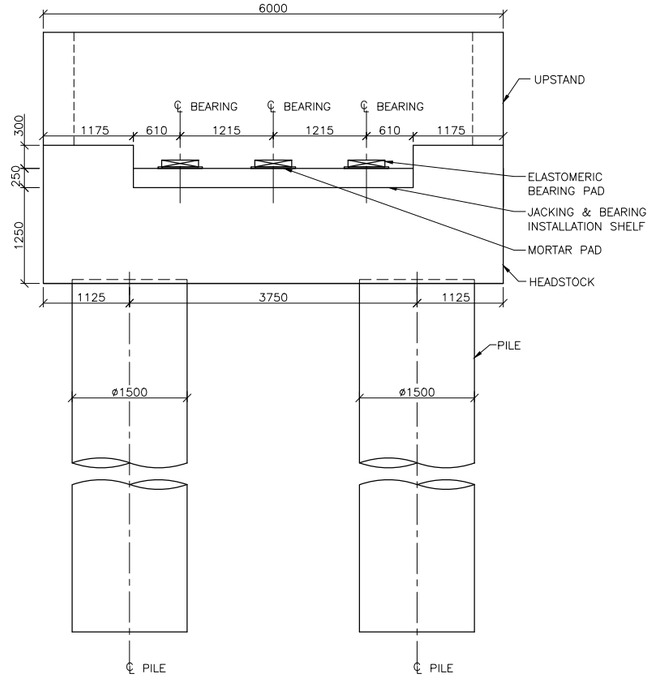

TYPICAL ELEVATION OF ABUTMENT

(TRANSVERSE DIRECTION)
SCALE 1:40

GENERAL NOTE:

1. ALL DIMENSIONS ARE IN MILLIMETRES UNLESS NOTED OTHERWISE.
2. CONCRETE GRADE SHALL BE AS FOLLOWS
   CAST IN SITU – S40
3. CLEAR COVER TO REINFORCEMENT ARE AS FOLLOWS.
   PILES – 85mm
   HEADSTOCK – 90mm
4. EXPOSURE CLASSIFICATION B2
5. PILES SHALL BE 1500mm DIAMETER BORED PILES. STEEL LINERS TO BE USED AS PER SITE REQUIREMENT (TEMPORARY STEEL LINER CAN BE USED UP TO 3m DEEP, HOWEVER IN SOME LOCATIONS TEMPORARY LINERS CAN BE USED UP TO 11m SUBJECT TO GEOTECH INVESTIGATION).

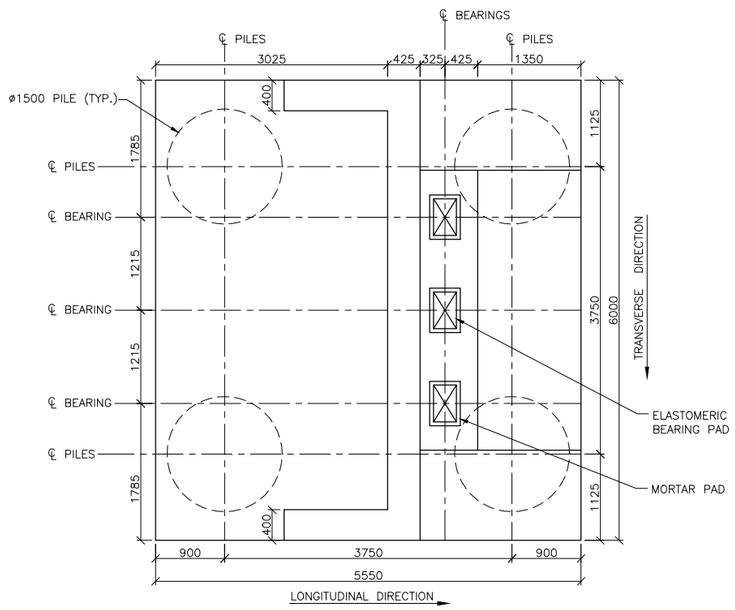

TYPICAL PLAN OF HEAD STOCK

SCALE 1:40

1 : 40 0 1000 2000mm

ISSUED FOR USE
NOT FOR CONSTRUCTION

REV	BY	DATE	DESCRIPTION	CKD	APP
0	SK	18/12/12	ISSUED FOR USE	RA	RB

REVISIONS

DRAWN	SYAM	18/12/12
DRAFTING CHECK	V RAMESH	18/12/12
ENG. APPROVED	P V S SARMA	18/12/12
PROJECT MANAGER	RICHARD BROMILOW	18/12/12
RPEQ APPROVAL SIGNED:	RUPESH ABBEY	18/12/12
NAME:	RUPESH ABBEY	
RPEQ No:	09126	

calibre
Calibre Operations Pty. Ltd.
Ground Floor, 545 Queen St
Brisbane QLD 4000
Australia
Tel: +61 (0)7 3001 6000
Fax: +61 (0)7 3001 6050

aarvee associates
Aarvee Associates Pty. Ltd.
Suite 39, Level 22, 69 Ann St
Brisbane QLD 4000
Australia
Tel: +61 (0)7 3112 5297
Fax: +61 (0)7 3112 5101

adani™

THIS DRAWING CONTAINS CONFIDENTIAL INFORMATION TO CALIBRE OPERATIONS PTY. LTD. & ITS AFFILIATED PARTIES. THE CLIENT HAS THE RIGHT TO USE THE INFORMATION CONTAINED IN THIS DRAWING PURSUANT TO CONTRACT BETWEEN CLIENT AND CALIBRE OPERATIONS PTY. LTD.

ORIGINAL SIZE A1

CARMICHAEL COAL MINE AND RAIL PROJECT
ADANI CLIENT'S ENGINEER - RAIL
STRUCTURAL - BRIDGE
TYPICAL ABUTMENT - 4 PILE GROUP - WITHOUT PILE CAP

MASTER COPY

PROJECT No. CARP12033

DRG No. CARP12033-1000-DWG-S-023

REV 0

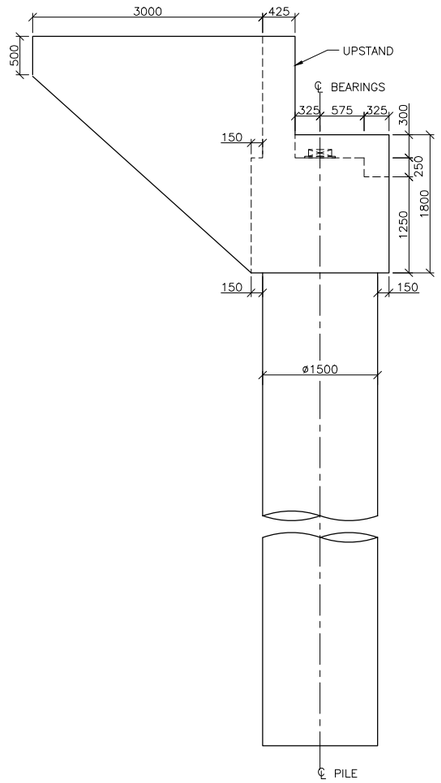

TYPICAL ELEVATION OF PILE

(LONGITUDINAL DIRECTION)
SCALE 1:40

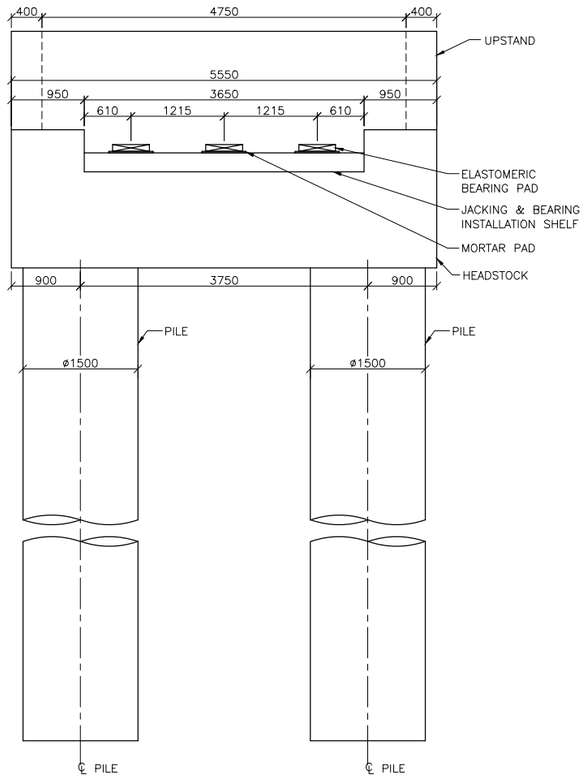

TYPICAL ELEVATION OF PILE

(TRANSVERSE DIRECTION)
SCALE 1:40

GENERAL NOTE:

1. ALL DIMENSIONS ARE IN MILLIMETRES UNLESS NOTED OTHERWISE.
2. CONCRETE GRADE SHALL BE AS FOLLOWS
   CAST IN SITU – S40
3. CLEAR COVER TO REINFORCEMENT ARE AS FOLLOWS.
   PILES – 85mm
   HEADSTOCK – 90mm
4. EXPOSURE CLASSIFICATION B2
5. PILES SHALL BE 1500mm DIAMETER BORED PILES. STEEL LINERS TO BE USED AS PER SITE REQUIREMENT (TEMPORARY STEEL LINER CAN BE USED UP TO 3m DEEP, HOWEVER IN SOME LOCATIONS TEMPORARY LINERS CAN BE USED UP TO 11m SUBJECT TO GEOTECH INVESTIGATION).

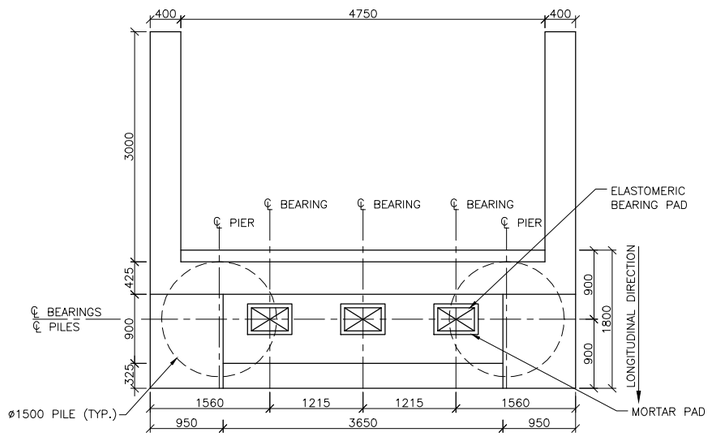

TYPICAL PLAN OF HEAD STOCK

(TRANSVERSE DIRECTION)
SCALE 1:40

1 : 40 0 1000 2000mm

ISSUED FOR USE
NOT FOR CONSTRUCTION

REVISIONS					
0	SK	18/12/12	ISSUED FOR USE	RA	RB
REV	BY	DATE	DESCRIPTION	CKD	APP

DRAWN	SYAM	18/12/12
DRAFTING CHECK	V RAMESH	18/12/12
ENG. APPROVED	P V S SARMA	18/12/12
PROJECT MANAGER	RICHARD BROMILOW	18/12/12
RPEQ APPROVAL SIGNED:	RUPESH ABBEY	18/12/12
NAME:	RUPESH ABBEY	
RPEQ No:	09126	

calibre
Calibre Operations Pty. Ltd.
Ground Floor, 545 Queen St
Brisbane QLD 4000
Australia
Tel: +61 (0)7 3001 6000
Fax: +61 (0)7 3001 6050

aarvee associates
Aarvee Associates Pty. Ltd.
Suite 39, Level 22, 69 Ann St
Brisbane QLD 4000
Australia
Tel: +61 (0)7 3112 5297
Fax: +61 (0)7 3112 5101

adani™
THIS DRAWING CONTAINS CONFIDENTIAL INFORMATION TO CALIBRE OPERATIONS PTY. LTD. & ITS AFFILIATED PARTIES. THE CLIENT HAS THE RIGHT TO USE THE INFORMATION CONTAINED IN THIS DRAWING PURSUANT TO CONTRACT BETWEEN CLIENT AND CALIBRE OPERATIONS PTY. LTD.

ORIGINAL SIZE A1

CARMICHAEL COAL MINE AND RAIL PROJECT
ADANI CLIENT'S ENGINEER - RAIL
STRUCTURAL - BRIDGE
TYPICAL ABUTMENT - 2 PILE GROUP - WITHOUT PILE CAP

MASTER COPY

PROJECT No. CARP12033

DRG No. CARP12033-1000-DWG-S-024

REV 0

GENERAL NOTE:

1. ALL DIMENSIONS ARE IN MILLIMETRES UNLESS NOTED OTHERWISE.
2. CONCRETE GRADE SHALL BE AS FOLLOWS
   CAST IN SITU – S40
3. CLEAR COVER TO REINFORCEMENT ARE AS FOLLOWS.
   PILES – 85mm
   HEADSTOCK – 90mm
4. EXPOSURE CLASSIFICATION B2
5. PILES SHALL BE 1500mm DIAMETER BORED PILES. STEEL LINERS TO BE USED AS PER SITE REQUIREMENT (TEMPORARY STEEL LINER CAN BE USED UP TO 3m DEEP, HOWEVER IN SOME LOCATIONS TEMPORARY LINERS CAN BE USED UP TO 11m SUBJECT TO GEOTECH INVESTIGATION).

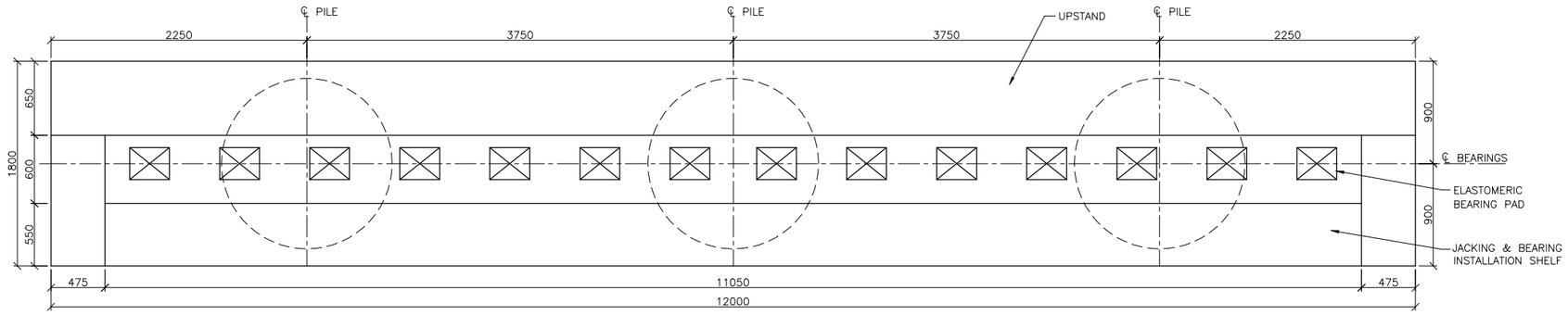

PLAN
SCALE 1:25

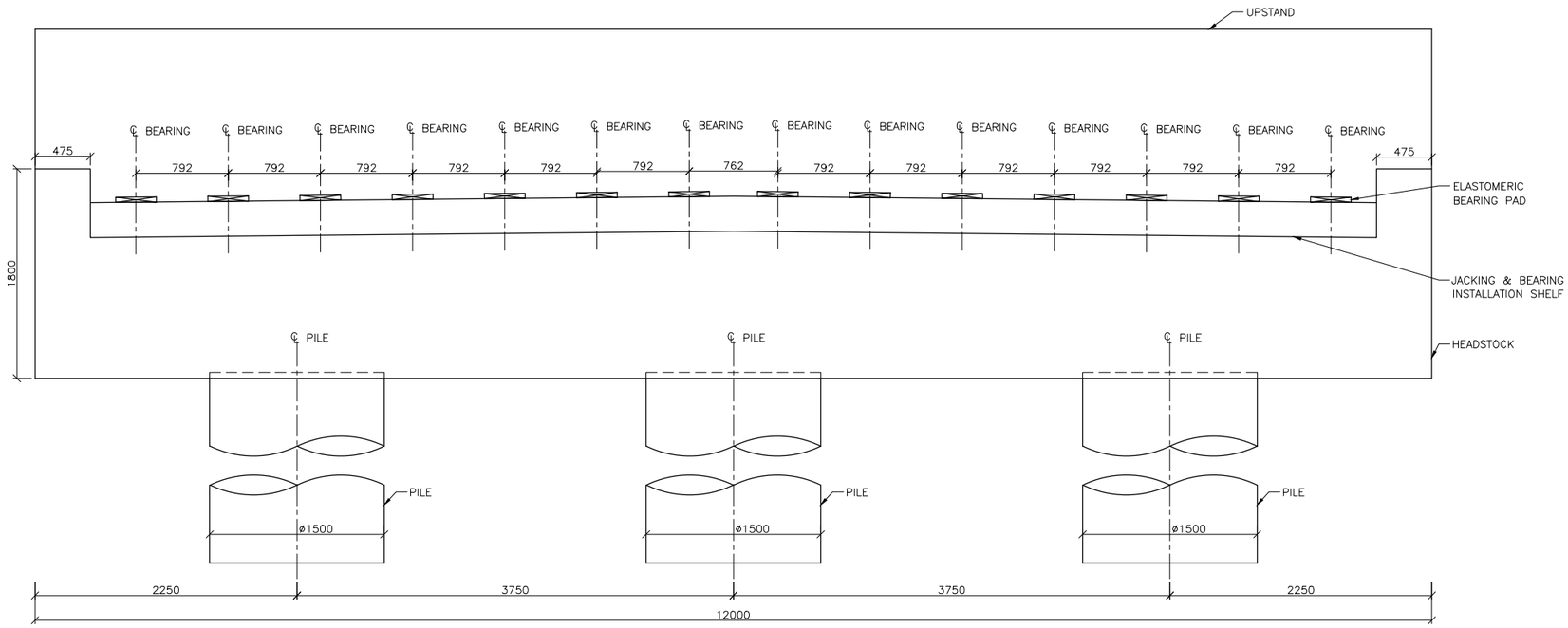

ELEVATION
SCALE 1:25
(TRANSVERSE DIRECTION)

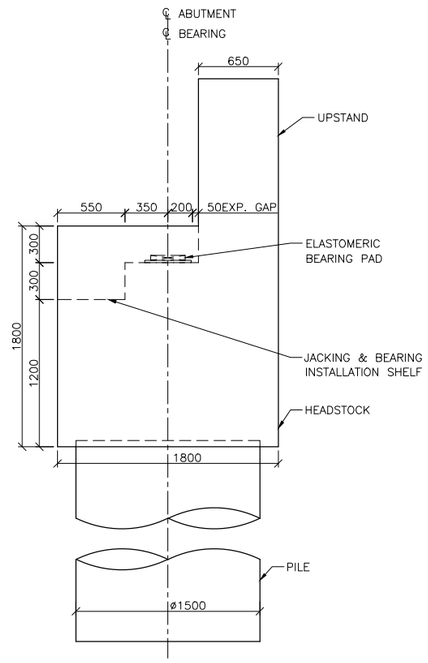

ELEVATION
SCALE 1:25
(LONGITUDINAL DIRECTION)

1 : 25 0 500 1000mm

ISSUED FOR USE
NOT FOR CONSTRUCTION

REV	BY	DATE	DESCRIPTION	CKD	APP
0	SK	18/12/12	ISSUED FOR USE	RA	RB

REVISIONS

DRAWN	SYAM	18/12/12
DRAFTING CHECK	V RAMESH	18/12/12
ENG. APPROVED	P V S SARMA	18/12/12
PROJECT MANAGER	RICHARD BROMILOW	18/12/12
RPEQ APPROVAL SIGNED:	RUPESH ABBEY	18/12/12
NAME:	RUPESH ABBEY	
RPEQ No:	09126	

calibre
Calibre Operations Pty. Ltd.
Ground Floor, 545 Queen St
Brisbane QLD 4000
Australia
Tel: +61 (0)7 3001 6000
Fax: +61 (0)7 3001 6050

aarvee associates
Aarvee Associates Pty. Ltd.
Suite 39, Level 22, 69 Ann St
Brisbane QLD 4000
Australia
Tel: +61 (0)7 3112 5297
Fax: +61 (0)7 3112 5101

adani™
THIS DRAWING CONTAINS CONFIDENTIAL INFORMATION TO CALIBRE OPERATIONS PTY. LTD. & ITS AFFILIATED PARTIES. THE CLIENT HAS THE RIGHT TO USE THE INFORMATION CONTAINED IN THIS DRAWING PURSUANT TO CONTRACT BETWEEN CLIENT AND CALIBRE OPERATIONS PTY. LTD.

ORIGINAL SIZE A1

CARMICHAEL COAL MINE AND RAIL PROJECT
ADANI CLIENT'S ENGINEER - RAIL
STRUCTURAL - BRIDGE
TYPICAL DETAILS OF RAIL UNDER ROAD BRIDGE ABUTMENT

MASTER COPY

PROJECT No. CARP12033

DRG No. CARP12033-1000-DWG-S-025

REV 0

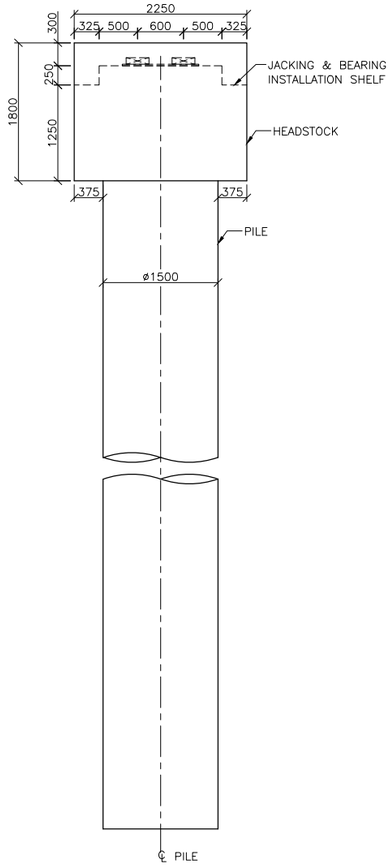

TYPICAL ELEVATION OF PILE

(LONGITUDINAL DIRECTION)
SCALE 1:40

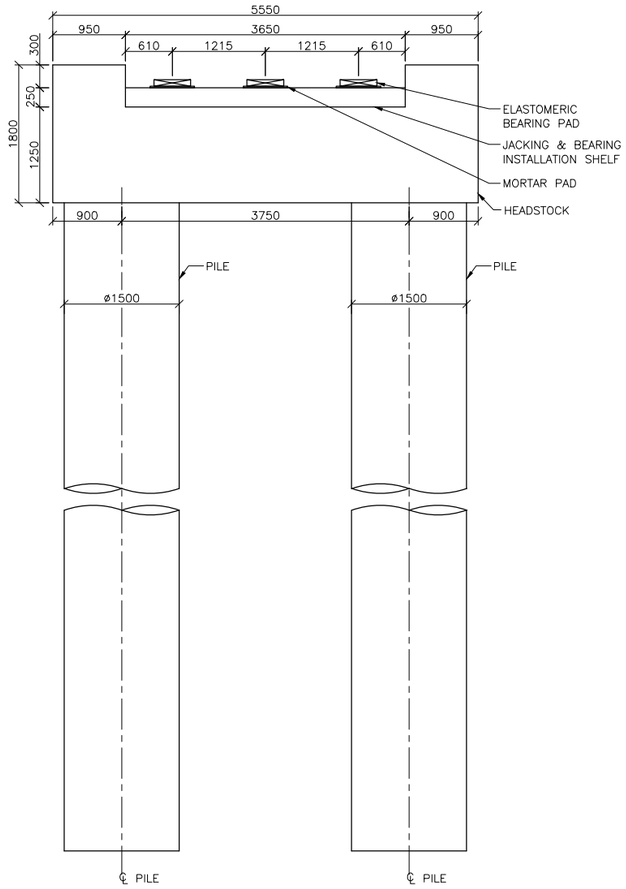

TYPICAL ELEVATION OF PILE

(TRANSVERSE DIRECTION)
SCALE 1:40

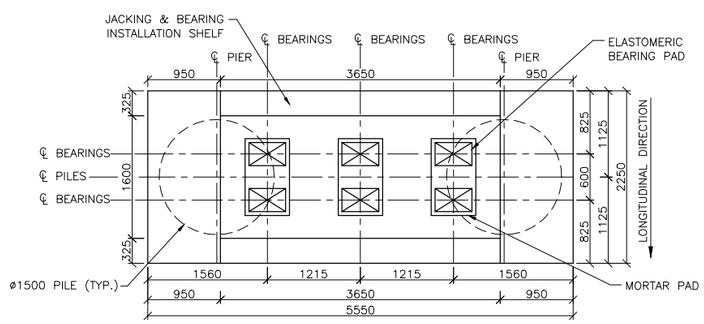

TYPICAL PLAN OF HEAD STOCK

(TRANSVERSE DIRECTION)
SCALE 1:40

GENERAL NOTE:

1. ALL DIMENSIONS ARE IN MILLIMETRES UNLESS NOTED OTHERWISE.
2. CONCRETE GRADE SHALL BE AS FOLLOWS
   CAST IN SITU – S40
3. CLEAR COVER TO REINFORCEMENT ARE AS FOLLOWS.
   PILES – 85mm
   HEADSTOCK – 90mm
4. EXPOSURE CLASSIFICATION B2
5. PILES SHALL BE 1500mm DIAMETER BORED PILES. STEEL LINERS TO BE USED AS PER SITE REQUIREMENT (TEMPORARY STEEL LINER CAN BE USED UP TO 3m DEEP, HOWEVER IN SOME LOCATIONS TEMPORARY LINERS CAN BE USED UP TO 11m SUBJECT TO GEOTECH INVESTIGATION).
6. CAST IN FERRULES TO BE PROVIDED FOR FUTURE FIXING OF OVERHEAD ELECTRIFICATION MASTS.

1 : 40 0 1000 2000mm

ISSUED FOR USE
NOT FOR CONSTRUCTION

REVISIONS

REV	BY	DATE	DESCRIPTION	CKD	APP
0	SK	18/12/12	ISSUED FOR USE	RA	RB

DRAWN	SYAM	18/12/12
DRAFTING CHECK	V RAMESH	18/12/12
ENG. APPROVED	P V S SARMA	18/12/12
PROJECT MANAGER	RICHARD BROMILOW	18/12/12
RPEQ APPROVAL SIGNED:	RUPESH ABBEY	18/12/12
NAME:	RUPESH ABBEY	
RPEQ No:	09126	

calibre
Calibre Operations Pty. Ltd.
Ground Floor, 545 Queen St
Brisbane QLD 4000
Australia
Tel: +61 (0)7 3001 6000
Fax: +61 (0)7 3001 6050

aarvee associates
Aarvee Associates Pty. Ltd.
Suite 39, Level 22, 69 Ann St
Brisbane QLD 4000
Australia
Tel: +61 (0)7 3112 5297
Fax: +61 (0)7 3112 5101

adani™

THIS DRAWING CONTAINS CONFIDENTIAL INFORMATION TO CALIBRE OPERATIONS PTY. LTD. & ITS AFFILIATED PARTIES. THE CLIENT HAS THE RIGHT TO USE THE INFORMATION CONTAINED IN THIS DRAWING PURSUANT TO CONTRACT BETWEEN CLIENT AND CALIBRE OPERATIONS PTY. LTD.

ORIGINAL SIZE A1

CARMICHAEL COAL MINE AND RAIL PROJECT
ADANI CLIENT'S ENGINEER - RAIL
STRUCTURAL - BRIDGE
TYPICAL PIER - 2 PILE GROUP - WITHOUT PILE CAP

MASTER COPY

PROJECT No. CARP12033

DRG No. CARP12033-1000-DWG-S-026

REV 0

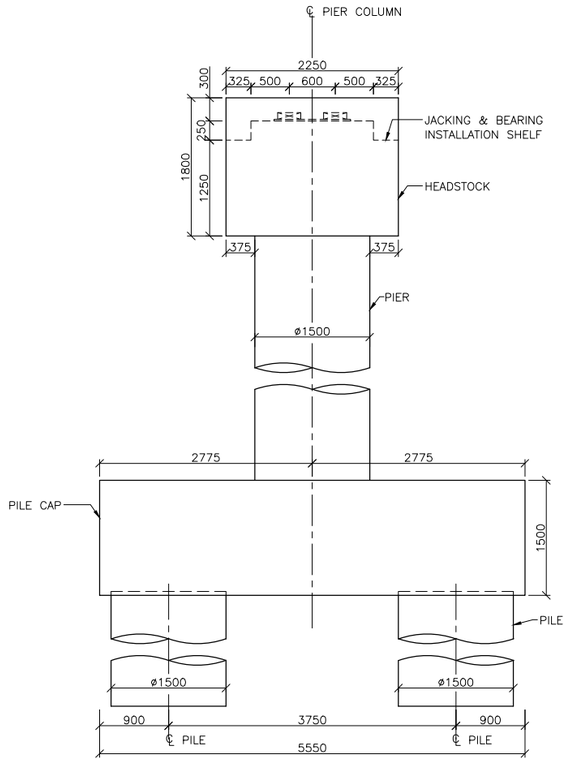

TYPICAL ELEVATION OF PIER

(LONGITUDINAL DIRECTION)

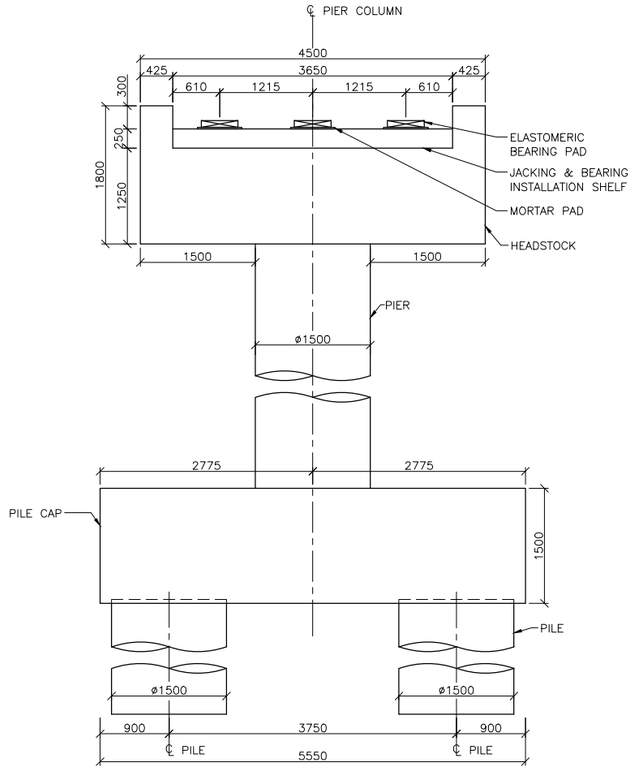

TYPICAL ELEVATION OF PIER

(TRANSVERSE DIRECTION)
SCALE 1:40

GENERAL NOTE:

1. ALL DIMENSIONS ARE IN MILLIMETRES UNLESS NOTED OTHERWISE.
2. CONCRETE GRADE SHALL BE AS FOLLOWS
   CAST IN SITU – S40
3. CLEAR COVER TO REINFORCEMENT ARE AS FOLLOWS.
   PILES – 85mm
   PILE CAP – 90mm
   PIER COLUMN – 50mm
   HEADSTOCK – 50mm
4. EXPOSURE CLASSIFICATION B2
5. PILES SHALL BE 1500mm DIAMETER BORED PILES. STEEL LINERS TO BE USED AS PER SITE REQUIREMENT (TEMPORARY STEEL LINER CAN BE USED UP TO 3m DEEP, HOWEVER IN SOME LOCATIONS TEMPORARY LINERS CAN BE USED UP TO 11m SUBJECT TO GEOTECH INVESTIGATION).
6. CAST IN FERRULES TO BE PROVIDED FOR FUTURE FIXING OF OVERHEAD ELECTRIFICATION MASTS.

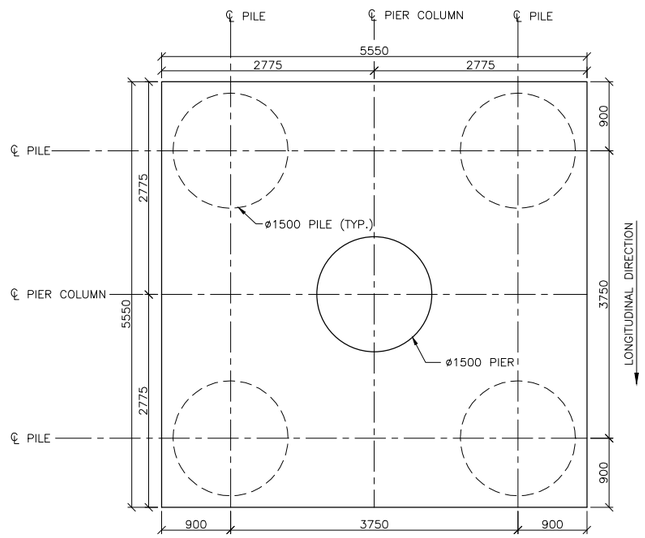

TYPICAL PLAN OF PILE CAP

(TRANSVERSE DIRECTION)
SCALE 1:40

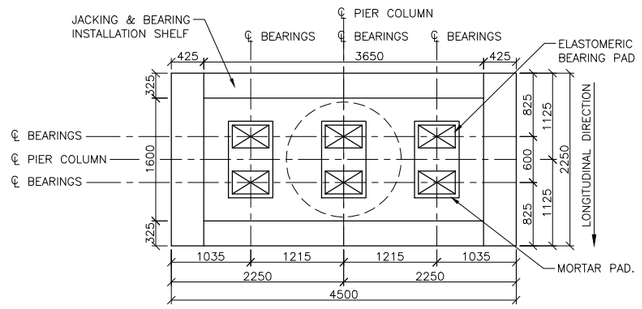

TYPICAL PLAN OF PIER HEAD STOCK

(TRANSVERSE DIRECTION)
SCALE 1:40

1 : 40 0 1000 2000mm

ISSUED FOR USE
NOT FOR CONSTRUCTION

REV	BY	DATE	DESCRIPTION	CKD	APP
0	SK	18/12/12	ISSUED FOR USE	RA	RB

REVISIONS

DRAWN	SYAM	18/12/12
DRAFTING CHECK	V RAMESH	18/12/12
ENG. APPROVED	P V S SARMA	18/12/12
PROJECT MANAGER	RICHARD BROMILOW	18/12/12
RPEQ APPROVAL SIGNED:	RUPESH ABBEY	18/12/12
NAME:	RUPESH ABBEY	
RPEQ No:	09126	

calibre
Calibre Operations Pty. Ltd.
Ground Floor, 545 Queen St
Brisbane QLD 4000
Australia
Tel: +61 (0)7 3001 6000
Fax: +61 (0)7 3001 6050

aarvee associates
Aarvee Associates Pty. Ltd.
Suite 39, Level 22, 69 Ann St
Brisbane QLD 4000
Australia
Tel: +61 (0)7 3112 5297
Fax: +61 (0)7 3112 5101

adani™
THIS DRAWING CONTAINS CONFIDENTIAL INFORMATION TO CALIBRE OPERATIONS PTY. LTD. & ITS AFFILIATED PARTIES. THE CLIENT HAS THE RIGHT TO USE THE INFORMATION CONTAINED IN THIS DRAWING PURSUANT TO CONTRACT BETWEEN CLIENT AND CALIBRE OPERATIONS PTY. LTD.

ORIGINAL SIZE A1

CARMICHAEL COAL MINE AND RAIL PROJECT
ADANI CLIENT'S ENGINEER - RAIL
STRUCTURAL - BRIDGE
TYPICAL PIER - 4 PILE GROUP - WITH PILE CAP

MASTER COPY

PROJECT No. CARP12033

DRG No. CARP12033-1000-DWG-S-027

REV 0

GENERAL NOTE:

1. ALL DIMENSIONS ARE IN MILLIMETRES UNLESS NOTED OTHERWISE.
2. CONCRETE GRADE SHALL BE S40.
3. CLEAR COVER TO REINFORCEMENT – 85mm
4. ALL REINFORCING BARS SHALL BE D500N IN ACCORDANCE WITH AS/NZS 4671:2001
5. PILES SHALL BE 1500mm DIAMETER BORED PILES. STEEL LINERS TO BE USED AS PER SITE REQUIREMENT (TEMPORARY STEEL LINER CAN BE USED UP TO 3m DEEP, HOWEVER IN SOME LOCATIONS TEMPORARY LINERS CAN BE USED UP TO 11m SUBJECT TO GEOTECH INVESTIGATION).

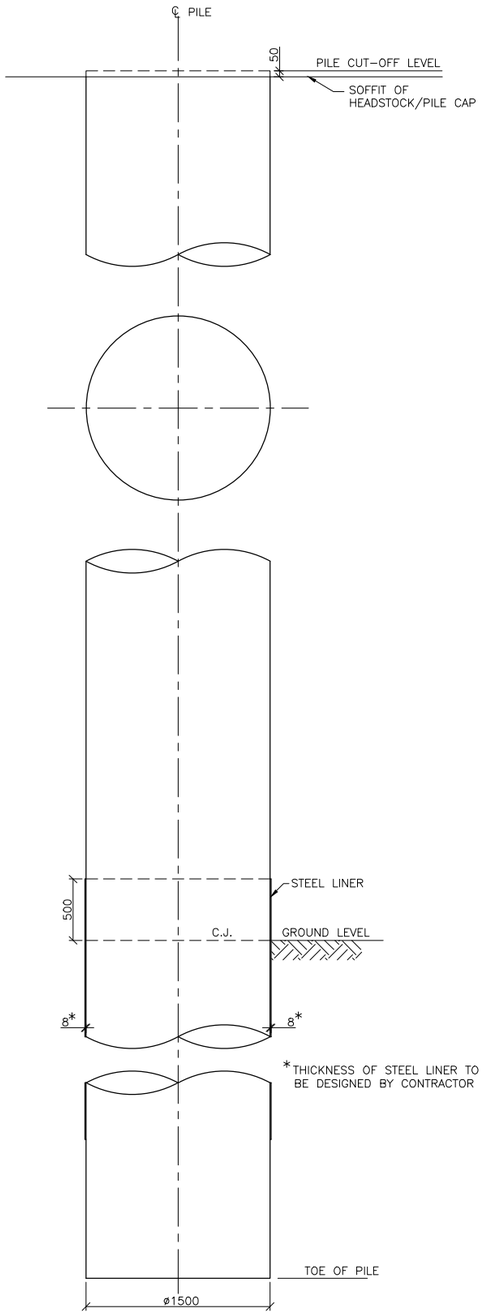

TYPICAL PILE DETAILS
SCALE 1:25

PILES QUANTITIES

BRIDGE ID.	BRIDGE CHAINAGE (KM)	BRIDGE SPAN	A1		P1		P2		P3		P4		P5		P6		A2	
			No'S	LENGTH (m)	No'S	LENGTH (m)	No'S	LENGTH (m)	No'S	LENGTH (m)	No'S	LENGTH (m)	No'S	LENGTH (m)	No'S	LENGTH (m)	No'S	LENGTH (m)
B1	63.207	5x20.2m	2	26.70	2	37.20	2	37.20	2	37.20	2	37.20	–	–	–	–	2	26.70
B2	67.652	1x20.2m	4	39.00	–	–	–	–	–	–	–	–	–	–	–	–	4	39.00
B3	82.712	7x20.2m	2	26.70	2	41.70	2	41.70	2	41.70	2	41.70	2	41.70	2	37.20	2	26.70
B4	86.122	3x20.2m	2	26.70	2	37.20	2	37.20	–	–	–	–	–	–	–	–	2	26.70
B5	90.771	4x20.2m	2	26.70	2	37.20	2	37.20	2	37.20	–	–	–	–	–	–	2	26.70
B6	108.100	1x26.4m	3	43.58	–	–	–		–	–	–	–	–	–	–	–	3	43.58
B7	113.447	4x20.2m	2	24.70	2	31.20	2	31.20	2	31.20	–	–	–	–	–	–	2	24.70
B8	120.732	5x20.2m	4	25.70	2	41.70	2	41.70	2	37.70	2	41.70	–	–	–	–	4	25.70
B9	121.415	5x20.2m	2	29.70	2	41.70	2	41.70	2	37.70	2	37.70	–	–	–	–	2	29.70
B10	139.334	5x20.2m	2	26.70	2	37.20	2	37.20	2	37.20	2	37.20	–	–	–	–	2	26.70
B11	145.962	4x20.2m	2	29.70	2	41.70	2	41.70	2	41.70	–	–	–	–	–	–	2	29.70
B12	149.063	4x20.2m	4	25.70	2	41.70	4	24.00	2	41.70	–	–	–	–	–	–	4	30.70
B13	149.558	4x20.2m	2	26.70	2	41.70	2	43.70	2	41.70	–	–	–	–	–	–	2	26.70
B14	150.648	4x20.2m	4	25.70	4	23.00	4	23.00	4	23.00	–	–	–	–	–	–	4	25.70
B15	153.020	3x20.2m	2	29.70	2	37.70	2	41.70	–	–	–	–	–	–	–	–	2	29.70
B16	170.458	5x20.2m	2	30.70	2	49.20	2	49.70	2	49.20	2	49.20	–	–	–	–	2	30.70
B17	176.201	4x20.2m	2	30.70	2	49.20	2	49.70	2	49.20	–	–	–	–	–	–	2	30.70

1 : 25 0 500 1000mm

ISSUED FOR USE
NOT FOR CONSTRUCTION

REV	BY	DATE	DESCRIPTION	CKD	APP
0	SK	19/12/12	ISSUED FOR USE	RA	RB

REVISIONS

DRAWN	SYAM	19/12/12
DRAFTING CHECK	V RAMESH	19/12/12
ENG. APPROVED	A N KESKAR	19/12/12
PROJECT MANAGER	RICHARD BROMILOW	19/12/12
RPEQ APPROVAL SIGNED:	RUPESH ABBEY	19/12/12
NAME:	RUPESH ABBEY	
RPEQ No:	09126	

calibre
Calibre Operations Pty. Ltd.
Ground Floor, 545 Queen St
Brisbane QLD 4000
Australia
Tel: +61 (0)7 3001 6000
Fax: +61 (0)7 3001 6050

aarvee associates
Aarvee Associates Pty. Ltd.
Suite 39, Level 22, 69 Ann St
Brisbane QLD 4000
Australia
Tel: +61 (0)7 3112 5297
Fax: +61 (0)7 3112 5101

adani™
THIS DRAWING CONTAINS CONFIDENTIAL INFORMATION TO CALIBRE OPERATIONS PTY. LTD. & ITS AFFILIATED PARTIES. THE CLIENT HAS THE RIGHT TO USE THE INFORMATION CONTAINED IN THIS DRAWING PURSUANT TO CONTRACT BETWEEN CLIENT AND CALIBRE OPERATIONS PTY. LTD.

ORIGINAL SIZE A1

CARMICHAEL COAL MINE AND RAIL PROJECT
ADANI CLIENT'S ENGINEER - RAIL
STRUCTURAL - BRIDGE
TYPICAL DETAILS OF CAST IN PLACE BORED PILES

MASTER COPY

PROJECT No. CARP12033
DRG No. CARP12033-1000-DWG-S-028
REV 0

GENERAL NOTE:

1. ALL DIMENSIONS ARE IN MILLIMETRES UNLESS NOTED OTHERWISE.

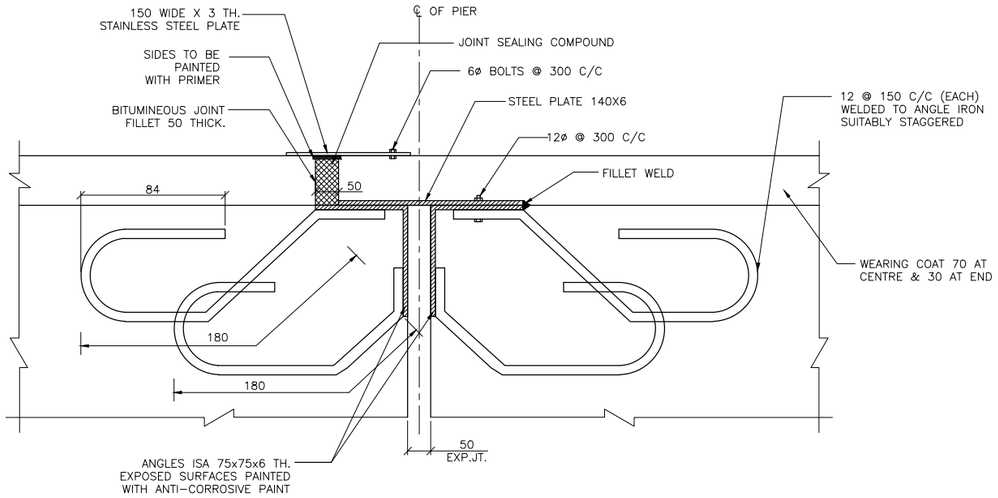

DETAIL OF EXPANSION JOINT

SCALE 1:10

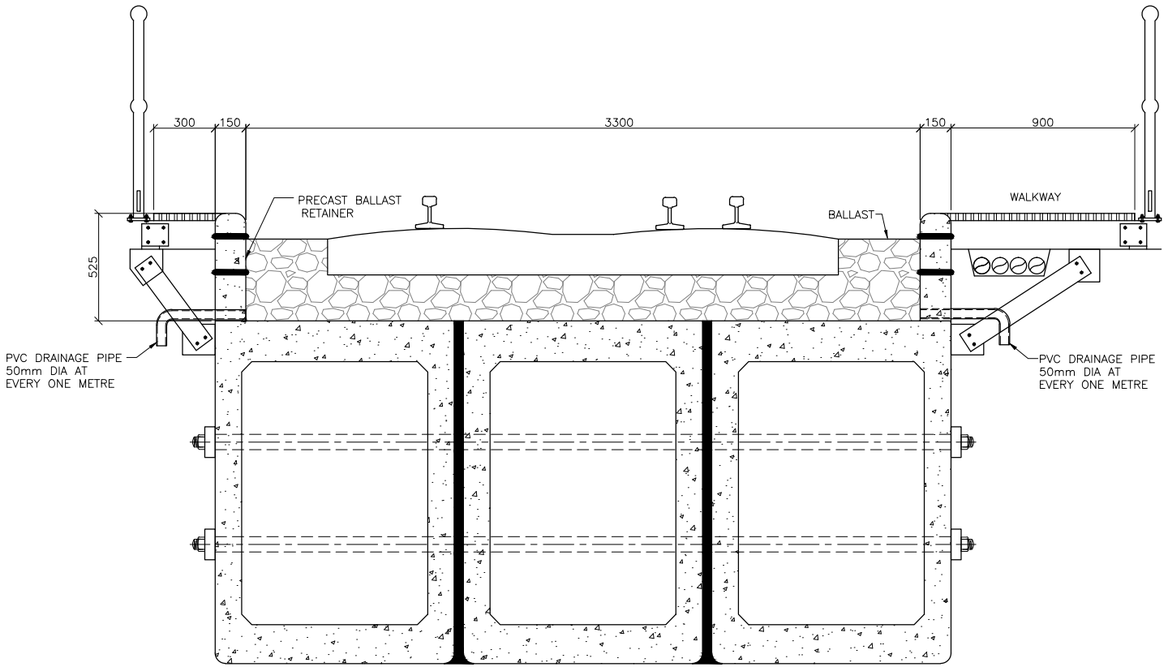

DETAIL OF DRAINAGE

SCALE 1:15

1 : 15 0 250 500mm 1 : 10 0 200 400mm

ISSUED FOR USE
NOT FOR CONSTRUCTION

REVISIONS					
0	SK	18/12/12	ISSUED FOR USE	RS	RB
REV	BY	DATE	DESCRIPTION	CKD	APP

DRAWN	SYAM	18/12/12
DRAFTING CHECK	A KARTHIK	18/12/12
ENG. APPROVED	P V S SARMA	18/12/12
PROJECT MANAGER	RICHARD BROMILOW	18/12/12
RPEQ APPROVAL SIGNED:	ROB STEELE	18/12/12
NAME:	ROB STEELE	
RPEQ No:	02217	

calibre
Calibre Operations Pty. Ltd.
Ground Floor, 545 Queen St
Brisbane QLD 4000
Australia
Tel: +61 (0)7 3001 6000
Fax: +61 (0)7 3001 6050

aarvee associates
Aarvee Associates Pty. Ltd.
Suite 39, Level 22, 69 Ann St
Brisbane QLD 4000
Australia
Tel: +61 (0)7 3112 5297
Fax: +61 (0)7 3112 5101

adani

THIS DRAWING CONTAINS CONFIDENTIAL INFORMATION TO CALIBRE OPERATIONS PTY. LTD. & ITS AFFILIATED PARTIES. THE CLIENT HAS THE RIGHT TO USE THE INFORMATION CONTAINED IN THIS DRAWING PURSUANT TO CONTRACT BETWEEN CLIENT AND CALIBRE OPERATIONS PTY. LTD.

ORIGINAL SIZE A1

CARMICHAEL COAL MINE AND RAIL PROJECT
ADANI CLIENT'S ENGINEER - RAIL
STRUCTURAL- BRIDGE
TYPICAL DETAILS OF DRAIN PIPE & EXPANSION JOINT

MASTER COPY

PROJECT No. CARP12033

DRG No. CARP12033-1000-DWG-S-030 REV 0

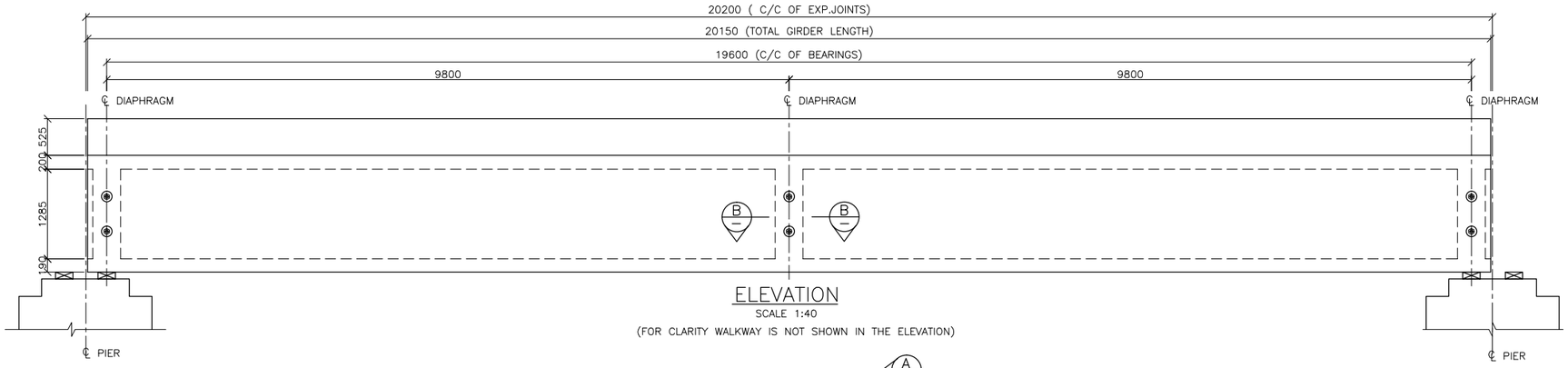

ELEVATION

SCALE 1:40

(FOR CLARITY WALKWAY IS NOT SHOWN IN THE ELEVATION)

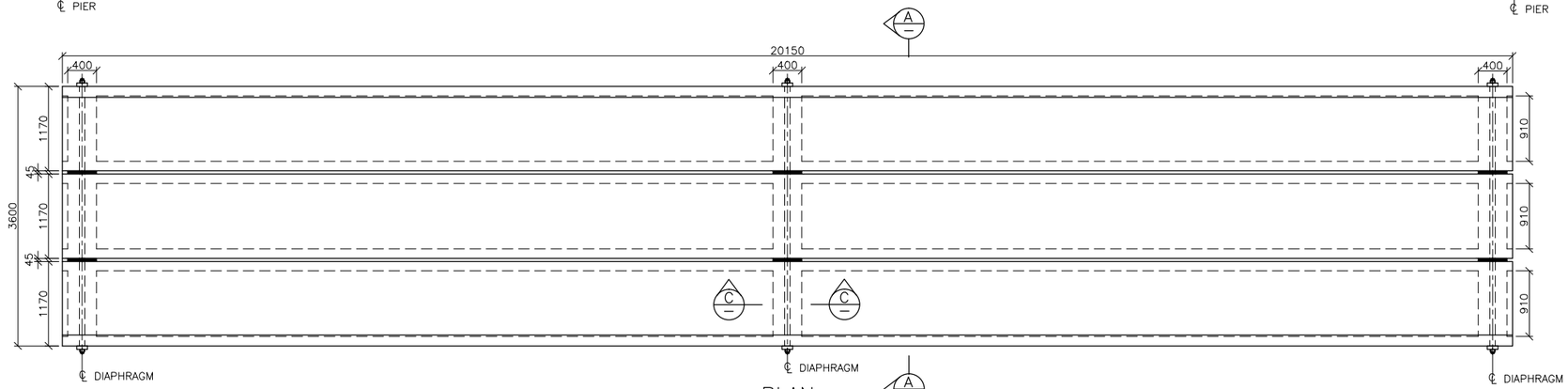

PLAN

SCALE 1:40

(FOR CLARITY WALKWAY IS NOT SHOWN IN THE PLAN)

GENERAL NOTES:

1. ALL DIMENSIONS ARE IN MILLIMETRES UNLESS NOTED OTHERWISE.
2. ALL CONCRETE SHALL BE GRADE S50.
3. PRE-STRESSING TENDONS SHALL BE 15.2mm NOMINAL DIAMETER 7 WIRES-ORDINARY LOW RELAXATION, STRESS RELIEVED HT STRANDS IN ACCORDANCE WITH AS/NZS 4672.1:2007 AND AS/NZS 4672.2:2007
4. ALL REINFORCING BARS SHALL BE D500N IN ACCORDANCE WITH AS/NZS 4671:2001
5. TRANSVERSE TENDONS SHALL CONSIST OF ø32, ALLOY STEEL, PRE-STRESSING BAR, COMPLYING WITH AS/NZS 4672.1:2007 AND AS/NZS 4672.2:2007 WITH GALVANISED ANCHORAGE SETS EACH END OF STANDARD BEARING PLATES, NUTS AND WASHERS.
6. THIS DRAWING SHALL BE READ IN CONJUNCTION WITH PRELIMINARY BRIDGE DESIGN CRITERIA

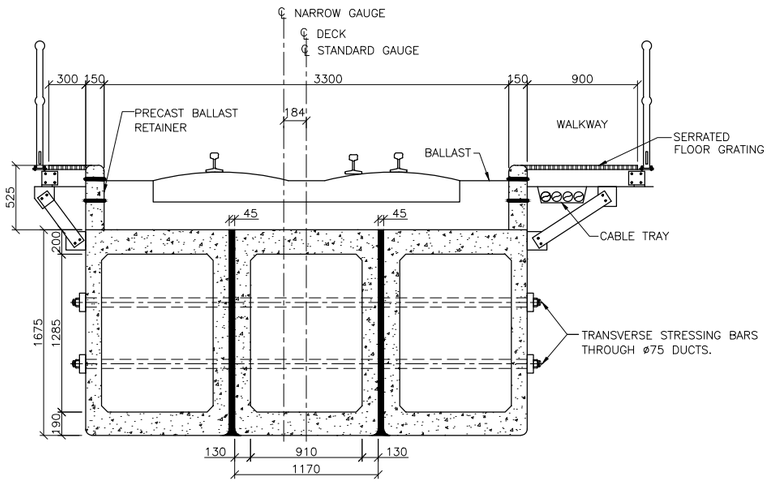

SECTION AA

SCALE 1:25

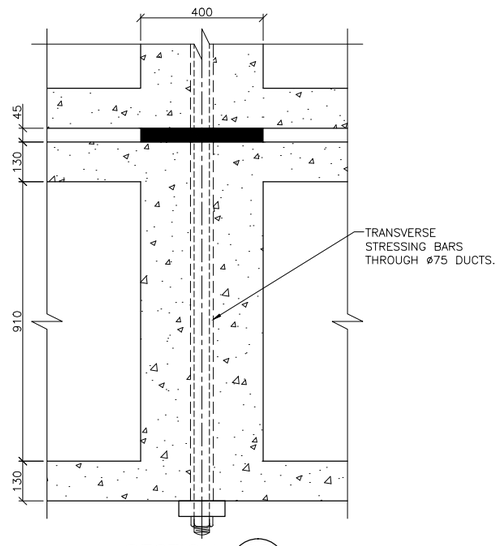

SECTION BB

SCALE 1:10

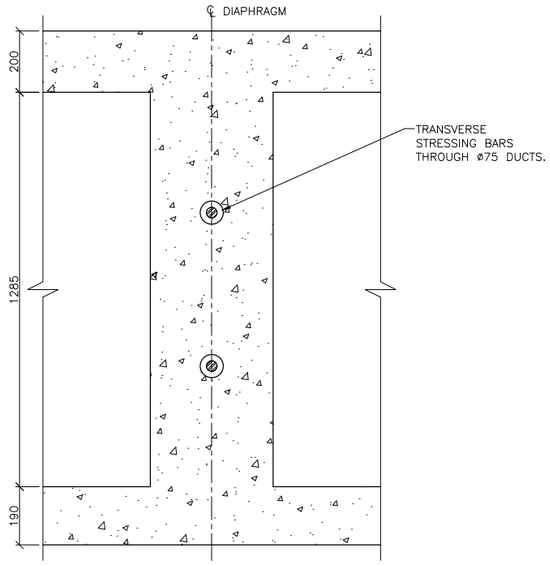

SECTION CC

SCALE 1:10

1 : 40 0 1000 2000mm

1 : 25 0 500 1000mm

1 : 10 0 200 400mm

ISSUED FOR USE
NOT FOR CONSTRUCTION

REV	BY	DATE	DESCRIPTION	CKD	APP
0	SK	18/12/12	ISSUED FOR USE	RS	RB

REVISIONS

DRAWN	SYAM	18/12/12
DRAFTING CHECK	A KARTHIK	18/12/12
ENG. APPROVED	V V RAMAYYA	18/12/12
PROJECT MANAGER	RICHARD BROMILOW	18/12/12
RPEQ APPROVAL SIGNED:	ROB STEELE	18/12/12
NAME:	ROB STEELE	
RPEQ No:	02217	

calibre
Calibre Operations Pty. Ltd.
Ground Floor, 545 Queen St
Brisbane QLD 4000
Australia
Tel: +61 (0)7 3001 6000
Fax: +61 (0)7 3001 6050

aarvee associates
Aarvee Associates Pty. Ltd.
Suite 39, Level 22, 69 Ann St
Brisbane QLD 4000
Australia
Tel: +61 (0)7 3112 5297
Fax: +61 (0)7 3112 5101

adani™

THIS DRAWING CONTAINS CONFIDENTIAL INFORMATION TO CALIBRE OPERATIONS PTY. LTD. & ITS AFFILIATED PARTIES. THE CLIENT HAS THE RIGHT TO USE THE INFORMATION CONTAINED IN THIS DRAWING PURSUANT TO CONTRACT BETWEEN CLIENT AND CALIBRE OPERATIONS PTY. LTD.

ORIGINAL SIZE A1

CARMICHAEL COAL MINE AND RAIL PROJECT
ADANI CLIENT'S ENGINEER - RAIL
STRUCTURAL - BRIDGE
TYPICAL 19.6m RAIL BRIDGE GIRDER - SHEET 1

MASTER COPY

PROJECT No. CARP12033

DRG No. CARP12033-1000-DWG-S-031

REV 0

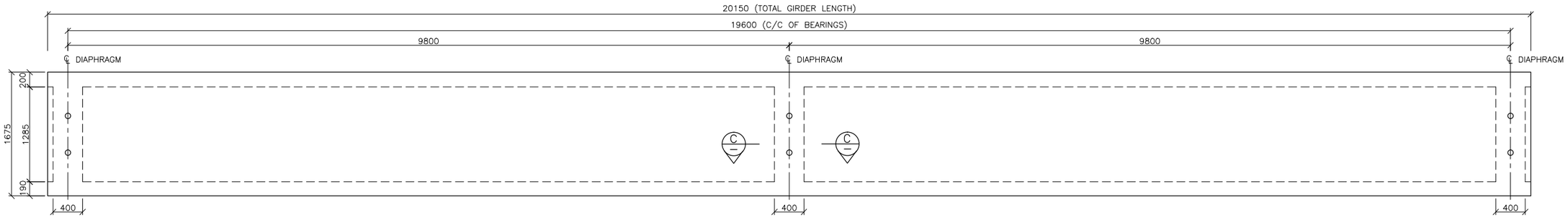

ELEVATION
SCALE 1:30

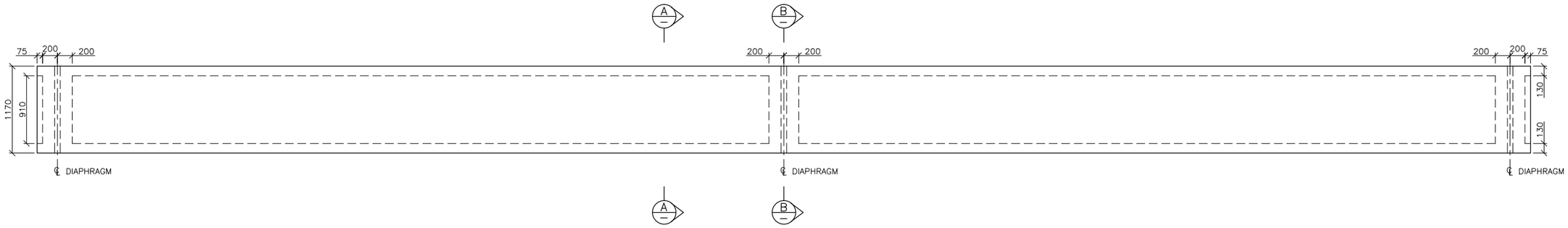

PLAN
SCALE 1:30

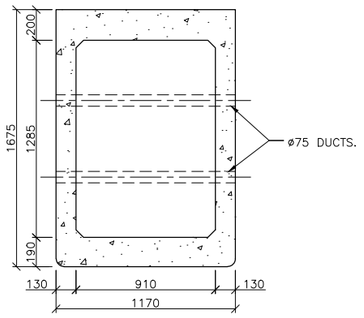

SECTION AA
SCALE 1:25

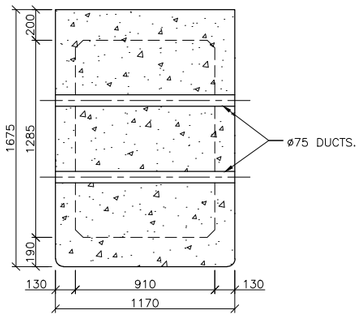

SECTION BB
SCALE 1:25

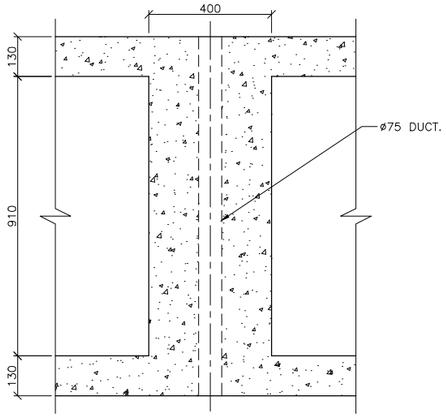

SECTION CC
SCALE 1:10

QUANTITY SCHEDULE PER GIRDER

ITEM	QTY	UNIT
CONCRETE	17.43	m³
DEFORMED BARS (D500N)	1.40	MT
PRESTRESS STRAND	0.82	MT
PRESTRESS BARS	0.15	MT

GENERAL NOTES:

1. ALL DIMENSIONS ARE IN MILLIMETRES UNLESS NOTED OTHERWISE.
2. ALL CONCRETE SHALL BE GRADE S50.
3. PRE-STRESSING TENDONS SHALL BE 15.2mm NOMINAL DIAMETER 7 WIRES-ORDINARY LOW RELAXATION, STRESS RELIEVED HT STRANDS IN ACCORDANCE WITH AS/NZS 4672.1:2007 AND AS/NZS 4672.2:2007
4. ALL REINFORCING BARS SHALL BE D500N IN ACCORDANCE WITH AS/NZS 4671:2001
5. TRANSVERSE TENDONS SHALL CONSIST OF ø32, ALLOY STEEL, PRE-STRESSING BAR, COMPLYING WITH AS/NZS 4672.1:2007 AND AS/NZS 4672.2:2007 WITH GALVANISED ANCHORAGE SETS EACH END OF STANDARD BEARING PLATES, NUTS AND WASHERS.
6. THIS DRAWING SHALL BE READ IN CONJUNCTION WITH PRELIMINARY BRIDGE DESIGN CRITERIA

1 : 30 0 500 1000mm
1 : 25 0 500 1000mm
1 : 10 0 200 400mm

ISSUED FOR USE
NOT FOR CONSTRUCTION

REVISIONS

REV	BY	DATE	DESCRIPTION	CKD	APP
0	SK	18/12/12	ISSUED FOR USE	RS	RB

DRAWN	SYAM	18/12/12
DRAFTING CHECK	A KARTHIK	18/12/12
ENG. APPROVED	P V S SARMA	18/12/12
PROJECT MANAGER	RICHARD BROMILOW	18/12/12
RPEQ APPROVAL SIGNED:	ROB STEELE	18/12/12
NAME:	ROB STEELE	
RPEQ No:	02217	

calibre
Calibre Operations Pty. Ltd.
Ground Floor, 545 Queen St
Brisbane QLD 4000
Australia
Tel: +61 (0)7 3001 6000
Fax: +61 (0)7 3001 6050

aarvee associates
Aarvee Associates Pty. Ltd.
Suite 39, Level 22, 69 Ann St
Brisbane QLD 4000
Australia
Tel: +61 (0)7 3112 5297
Fax: +61 (0)7 3112 5101

adani™

THIS DRAWING CONTAINS CONFIDENTIAL INFORMATION TO CALIBRE OPERATIONS PTY. LTD. & ITS AFFILIATED PARTIES. THE CLIENT HAS THE RIGHT TO USE THE INFORMATION CONTAINED IN THIS DRAWING PURSUANT TO CONTRACT BETWEEN CLIENT AND CALIBRE OPERATIONS PTY. LTD.

ORIGINAL SIZE A1

CARMICHAEL COAL MINE AND RAIL PROJECT
ADANI CLIENT'S ENGINEER - RAIL
STRUCTURAL - BRIDGE
TYPICAL 19.6m RAIL BRIDGE GIRDER - SHEET 2

MASTER COPY

PROJECT No. CARP12033
DRG No. CARP12033-1000-DWG-S-032
REV 0

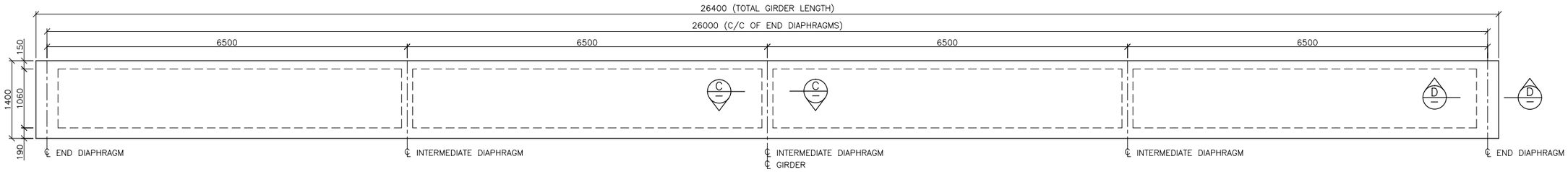

ELEVATION

SCALE 1:40

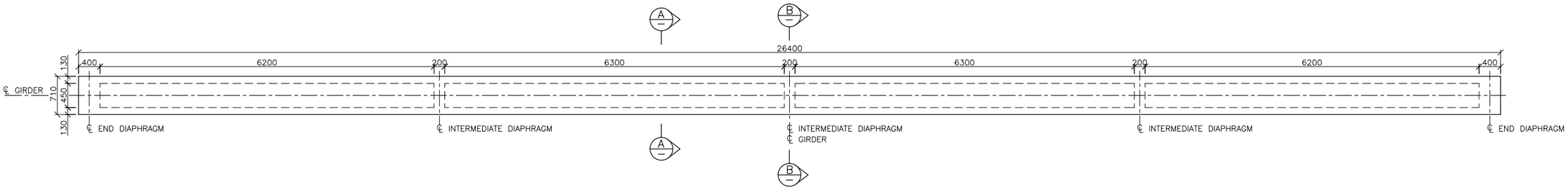

PLAN

SCALE 1:40

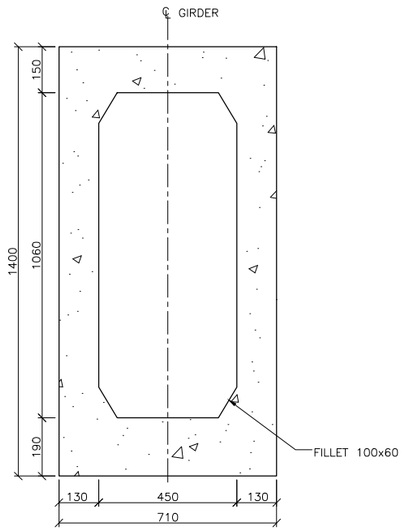

SECTION AA

SCALE 1:10

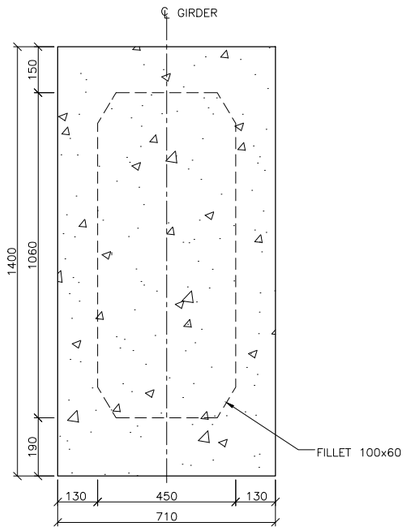

SECTION BB

SCALE 1:10

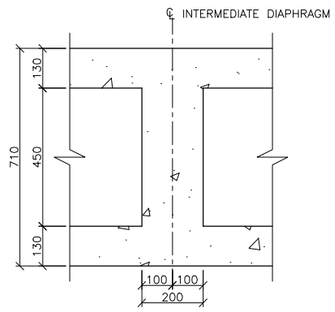

SECTION CC

SCALE 1:10

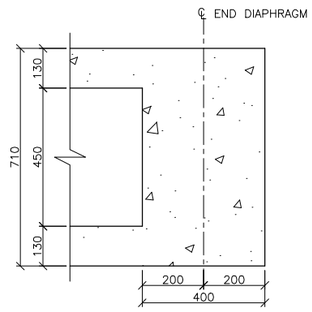

SECTION DD

SCALE 1:10

QUANTITY SCHEDULE

ITEM	QTY	UNIT
DECK SLAB (GRADE – S40)	52.3	m^3
CONCRETE BARRIER (GRADE – S40)	34.4	m^3
PSC (14 GIRDERS) (GRADE – S50)	204.7	m^3
DWS	18.5	m^3
STEEL (D500N)	33.4	MT
PRESTRESS STRANDS	13.3	MT

GENERAL NOTES:

1. ALL DIMENSIONS ARE IN MILLIMETRES UNLESS NOTED OTHERWISE.
2. CONCRETE GRADE SHALL BE AS FOLLOWS.
   PRECAST – S50
   CAST–IN–PLACE – S40
3. PRESTRESSING TENDONS SHALL BE 15.2mm NOMINAL DIAMETER 7 WIRE ORDINARY STRAND AND NOMINAL TENSILE STRENGTH OF 1750MPa RELAX2 (LOW RELAXATION STRAND) CONFORMING TO AS/NZS 4672.1:2007 & AS/NZS 4672.2:2007
3. ALL REINFORCING BARS SHALL BE D500N IN ACCORDANCE WITH AS/NZS 4671:2001
4. THIS DRAWING SHALL BE READ IN CONJUNCTION WITH PRELIMINARY BRIDGE DESIGN CRITERIA (PDC)

1 : 40 0 1000 2000mm

1 : 10 0 250 500mm

ISSUED FOR USE
NOT FOR CONSTRUCTION

REVISIONS

REV	BY	DATE	DESCRIPTION	CKD	APP
0	SK	18/12/12	ISSUED FOR USE	RS	RB

DRAWN	SYAM	18/12/12
DRAFTING CHECK	A KARTHIK	18/12/12
ENG. APPROVED	P V S SARMA	18/12/12
PROJECT MANAGER	RICHARD BROMILOW	18/12/12
RPEQ APPROVAL SIGNED:	ROB STEELE	18/12/12
NAME:	ROB STEELE	
RPEQ No:	02217	

calibre
Calibre Operations Pty. Ltd.
Ground Floor, 545 Queen St
Brisbane QLD 4000
Australia
Tel: +61 (0)7 3001 6000
Fax: +61 (0)7 3001 6050

aarvee associates
Aarvee Associates Pty. Ltd.
Suite 39, Level 22, 69 Ann St
Brisbane QLD 4000
Australia
Tel: +61 (0)7 3112 5297
Fax: +61 (0)7 3112 5101

adani™
THIS DRAWING CONTAINS CONFIDENTIAL INFORMATION TO CALIBRE OPERATIONS PTY. LTD. & ITS AFFILIATED PARTIES. THE CLIENT HAS THE RIGHT TO USE THE INFORMATION CONTAINED IN THIS DRAWING PURSUANT TO CONTRACT BETWEEN CLIENT AND CALIBRE OPERATIONS PTY. LTD.

ORIGINAL SIZE A1

CARMICHAEL COAL MINE AND RAIL PROJECT
ADANI CLIENT'S ENGINEER - RAIL
STRUCTURAL - BRIDGE
TYPICAL 26.0m ROAD BRIDGE GIRDER - SHEET 1

MASTER COPY

PROJECT No. CARP12033

DRG No. CARP12033-1000-DWG-S-033

REV 0

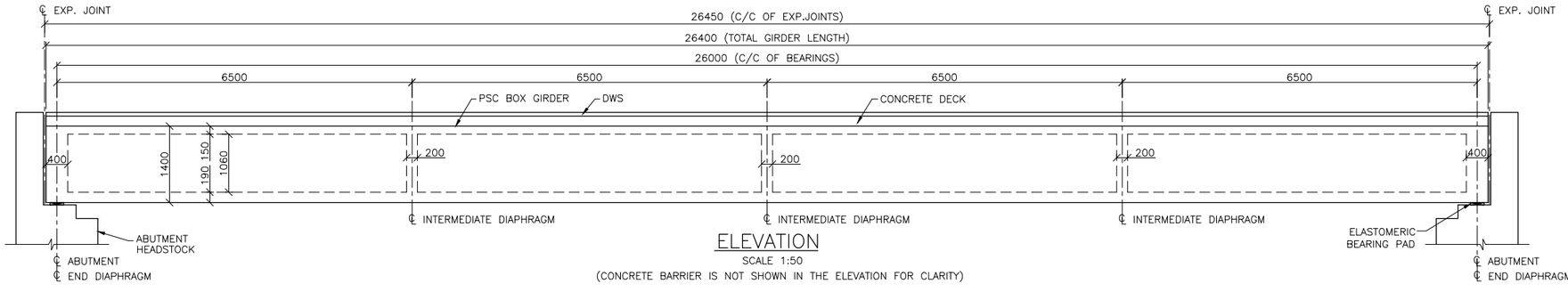

ELEVATION

SCALE 1:50

(CONCRETE BARRIER IS NOT SHOWN IN THE ELEVATION FOR CLARITY)

GENERAL NOTES:

1. ALL DIMENSIONS ARE IN MILLIMETRES UNLESS NOTED OTHERWISE.
2. CONCRETE GRADE SHALL BE AS FOLLOWS.
   PRECAST – S50
   CAST–IN–PLACE – S40
3. PRESTRESSING TENDONS SHALL BE 15.2mm NOMINAL DIAMETER 7 WIRE ORDINARY STRAND AND NOMINAL TENSILE STRENGTH OF 1750MPa RELAX2 (LOW RELAXATION STRAND) CONFORMING TO AS/NZS 4672.1:2007 & AS/NZS 4672.2:2007
3. ALL REINFORCING BARS SHALL BE D500N IN ACCORDANCE WITH AS/NZS 4671:2001
4. THIS DRAWING SHALL BE READ IN CONJUNCTION WITH PRELIMINARY BRIDGE DESIGN CRITERIA (PDC)

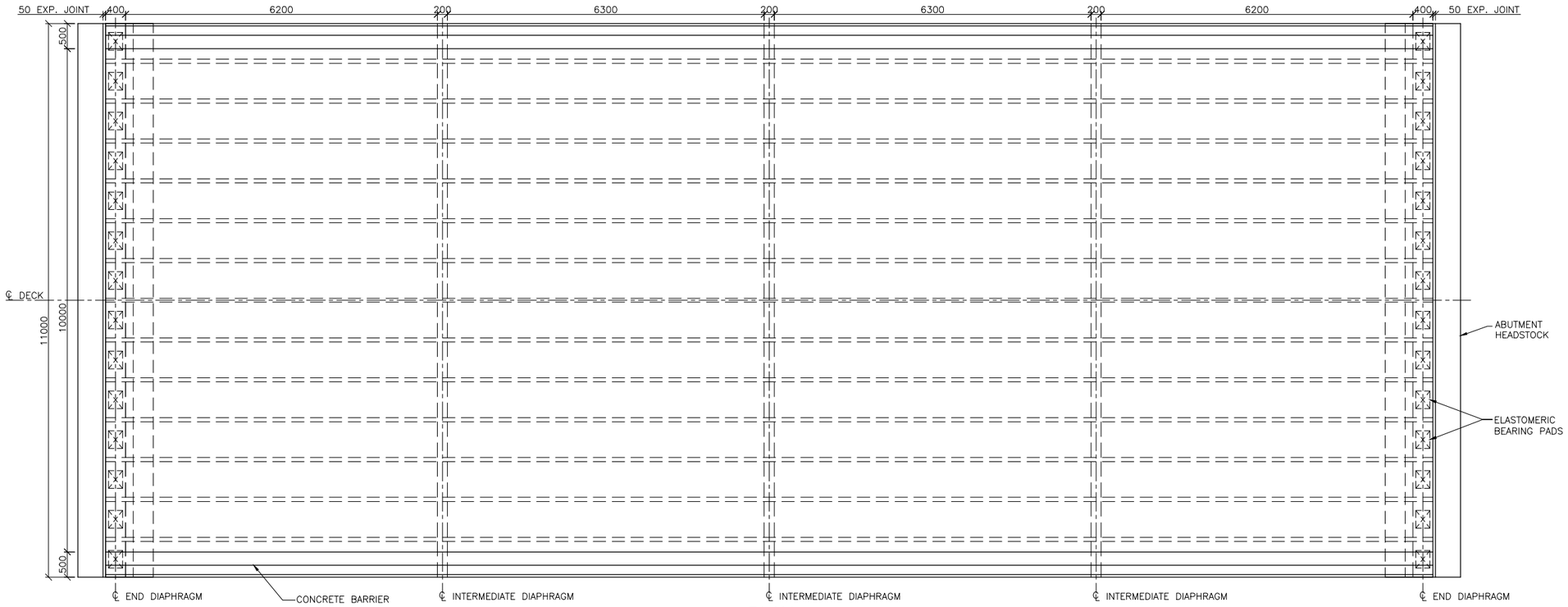

PLAN

SCALE 1:50

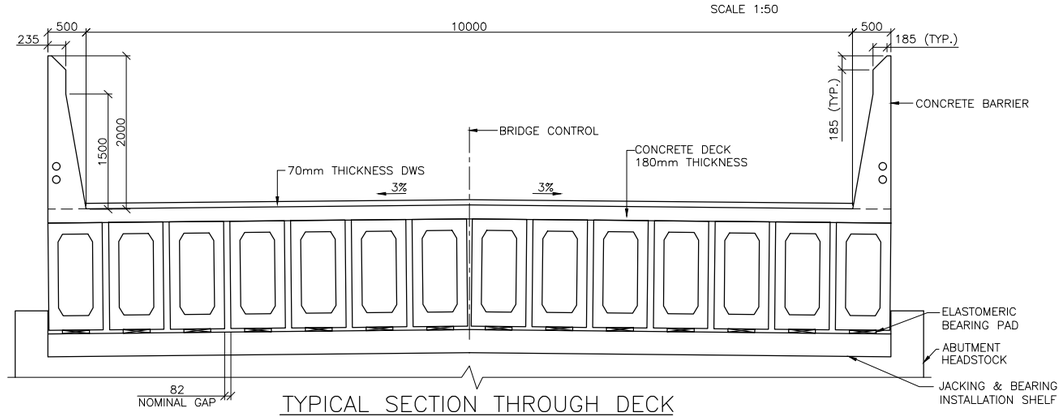

TYPICAL SECTION THROUGH DECK

SCALE 1:40

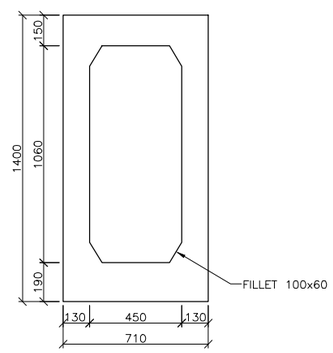

TYPICAL GIRDER SECTION

SCALE 1:15

1 : 50 0 1000 2000mm
1 : 40 0 1000 2000mm
1 : 15 0 250 500mm

ISSUED FOR USE
NOT FOR CONSTRUCTION

REV	BY	DATE	DESCRIPTION	CKD	APP
0	SK	18/12/12	ISSUED FOR USE	RS	RB

REVISIONS

DRAWN	SYAM	18/12/12
DRAFTING CHECK	A KARTHIK	18/12/12
ENG. APPROVED	P V S SARMA	18/12/12
PROJECT MANAGER	RICHARD BROMILOW	18/12/12
RPEQ APPROVAL SIGNED:	ROB STEELE	18/12/12
NAME:	ROB STEELE	
RPEQ No:	02217	

calibre
Calibre Operations Pty. Ltd.
Ground Floor, 545 Queen St
Brisbane QLD 4000
Australia
Tel: +61 (0)7 3001 6000
Fax: +61 (0)7 3001 6050

aarvee associates
Aarvee Associates Pty. Ltd.
Suite 39, Level 22, 69 Ann St
Brisbane QLD 4000
Australia
Tel: +61 (0)7 3112 5297
Fax: +61 (0)7 3112 5101

adani™

THIS DRAWING CONTAINS CONFIDENTIAL INFORMATION TO CALIBRE OPERATIONS PTY. LTD. & ITS AFFILIATED PARTIES. THE CLIENT HAS THE RIGHT TO USE THE INFORMATION CONTAINED IN THIS DRAWING PURSUANT TO CONTRACT BETWEEN CLIENT AND CALIBRE OPERATIONS PTY. LTD.

ORIGINAL SIZE A1

CARMICHAEL COAL MINE AND RAIL PROJECT
ADANI CLIENT'S ENGINEER - RAIL
STRUCTURAL - BRIDGE
TYPICAL 26.0m ROAD BRIDGE GIRDER - SHEET 2

MASTER COPY

PROJECT No. CARP12033

DRG No. CARP12033-1000-DWG-S-034

REV 0

NOTES:–

1. ALL DIMENSIONS ARE IN MILLIMETERS, UNLESS NOTED OTHERWISE.
2. DESIGN OF ROCK PROTECTION IS BASED ON RECOMMENDATION FROM AUSTROADS–WATERWAY DESIGN MANUAL.
3. TYPICAL FLOW VELOCITY CONSIDERED FOR DESIGN IS 2.5 m/sec AND CLASS ROCK PROTECTION (Wc) IS 1/4 TONNE (FOR VELOCITY V_{design} = 2.5 x 1.33 = 3.3 m/sec)

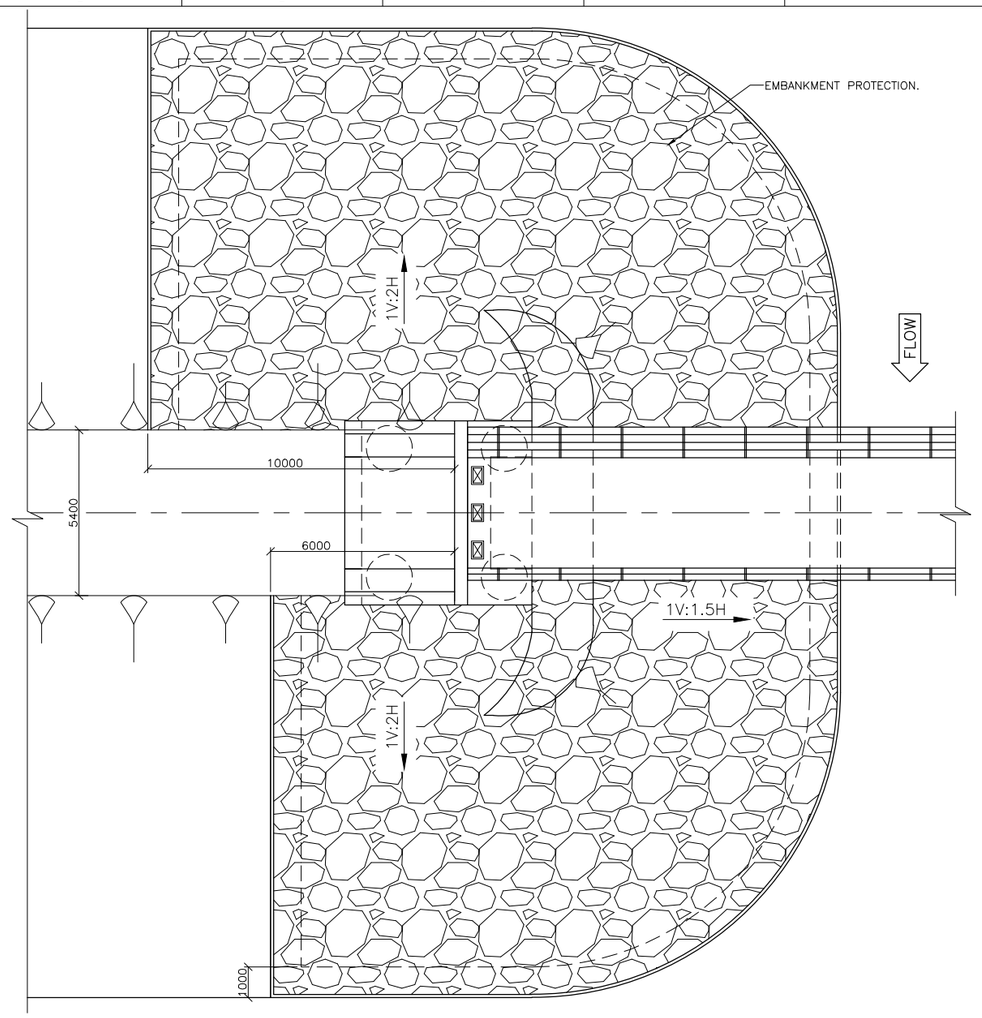

TYPICAL PLAN OF ROCK PROTECTION AT ABUTMENT LOCATION

SCALE 1:100

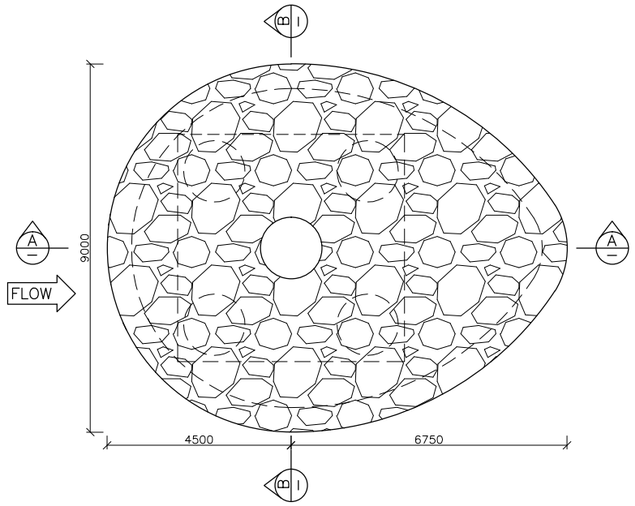

TYPICAL PLAN OF ROCK PROTECTION AT PIER LOCATION

SCALE 1 : 75

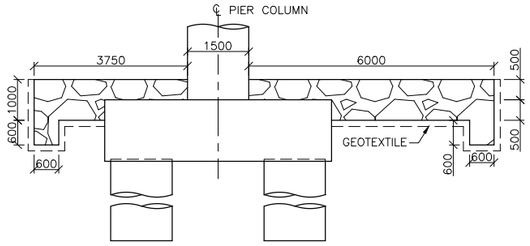

SECTION AA

SCALE 1:75

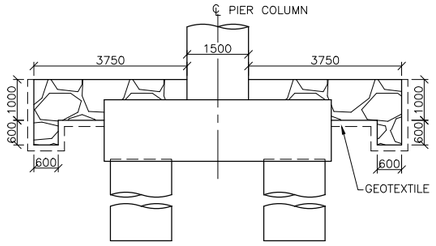

SECTION BB

SCALE 1:75

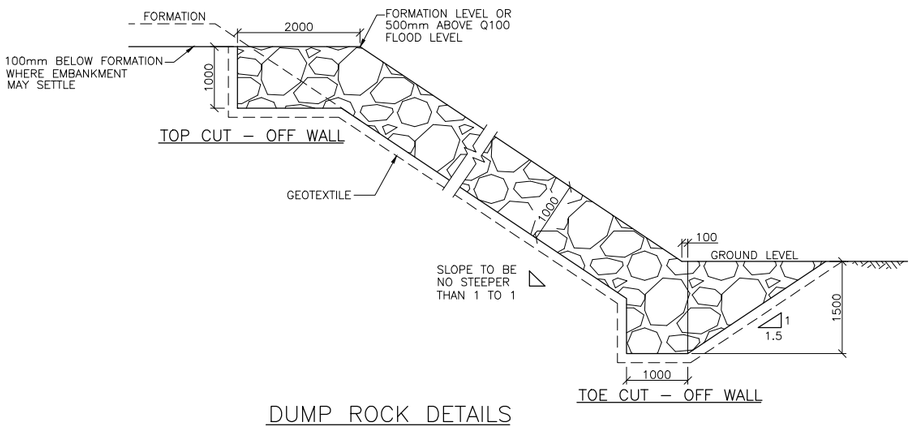

DUMP ROCK DETAILS

SCALE 1:50

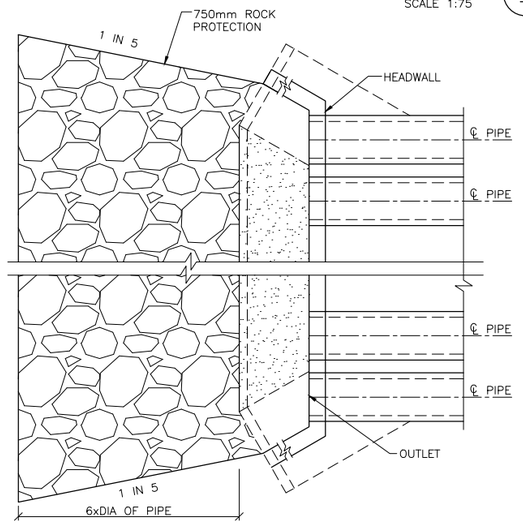

TYPICAL PLAN OF DUMP ROCK DETAILS DOWN STREAM OF PIPE CULVERT

SCALE 1:75

1 : 100 0 1 2 3 4 5m

1 : 75 0 1 2 3 4m

1 : 50 0 1000 2000mm

ISSUED FOR USE
NOT FOR CONSTRUCTION

REVISIONS

REV	BY	DATE	DESCRIPTION	CKD	APP
0	SK	18/12/12	ISSUED FOR USE	DT	RB

DRAWN	SYAM	18/12/12
DRAFTING CHECK	JISHNU	18/12/12
ENG. APPROVED	P V S SARMA	18/12/12
PROJECT MANAGER	RICHARD BROMILOW	18/12/12
RPEQ APPROVAL SIGNED:	DANIEL TING	18/12/12
NAME:	DANIEL TING	
RPEQ No:	05784	

Calibre Operations Pty. Ltd.
Ground Floor, 545 Queen St
Brisbane QLD 4000
Australia
Tel: +61 (0)7 3001 6000
Fax: +61 (0)7 3001 6050

Aarvee Associates Pty. Ltd.
Suite 39, Level 22, 69 Ann St
Brisbane QLD 4000
Australia
Tel: +61 (0)7 3112 5297
Fax: +61 (0)7 3112 5101

THIS DRAWING CONTAINS CONFIDENTIAL INFORMATION TO CALIBRE OPERATIONS PTY. LTD. & ITS AFFILIATED PARTIES. THE CLIENT HAS THE RIGHT TO USE THE INFORMATION CONTAINED IN THIS DRAWING PURSUANT TO CONTRACT BETWEEN CLIENT AND CALIBRE OPERATIONS PTY. LTD.

ORIGINAL SIZE A1

CARMICHAEL COAL MINE AND RAIL PROJECT
ADANI CLIENT'S ENGINEER - RAIL
STRUCTURAL-BRIDGE
TYPICAL SCOUR PROTECTION DETAILS

MASTER COPY

PROJECT No. CARP12033

DRG No. CARP12033-1000-DWG-S-040

REV 0

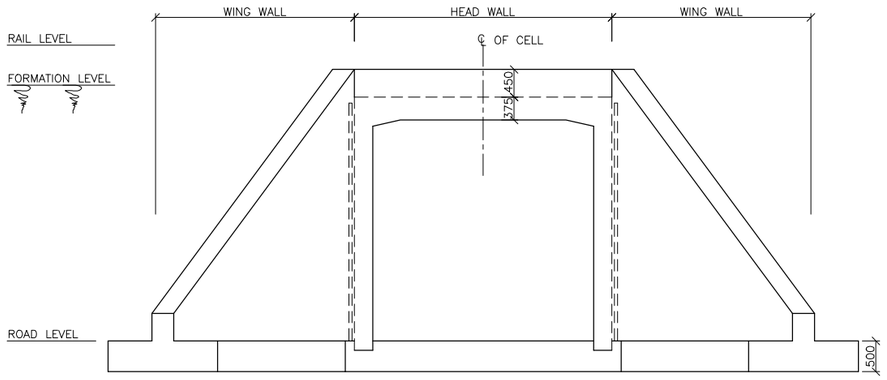

ELEVATION
SCALE 1:50

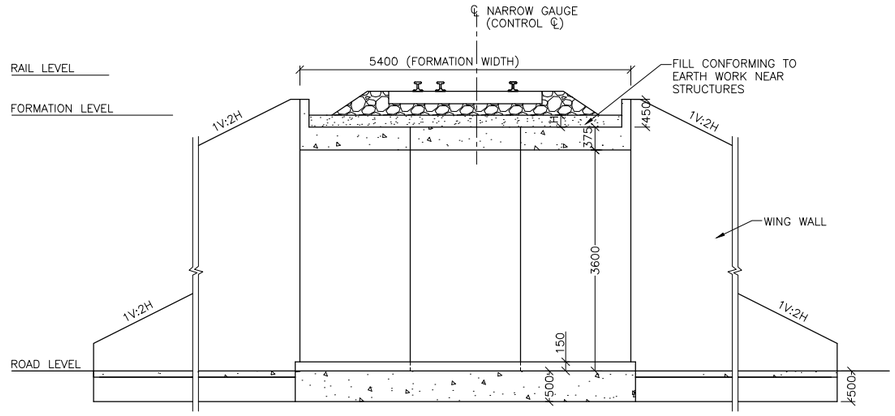

SECTION CC
SCALE 1:50

GENERAL NOTES :

1. ALL DIMENSION ARE IN MILLIMETRES UNLESS NOTED OTHERWISE.
2. CONCRETE GRADE SHALL BE AS FOLLOWS
   PRECAST CONCRETE : S50.
   CAST-IN-SITU CONCRETE : S40.
3. REINFORCING BARS SHALL BE GRADE D500N IN ACCORDANCE WITH AS/NZS 4671:2001

CULVERT ID	CHAINAGE (km)	ROAD LEVEL (m)	FORMATION LEVEL (m)	BARREL LENGTH (m)	CUT (m)	CUSHION "H" (m)
BC1	67.100	207.200	215.316	21.764	–	4.141
BC2	120.457	189.722	193.400	6.000	0.450	0.150
BC3	146.600	196.557	200.893	6.844	–	0.361

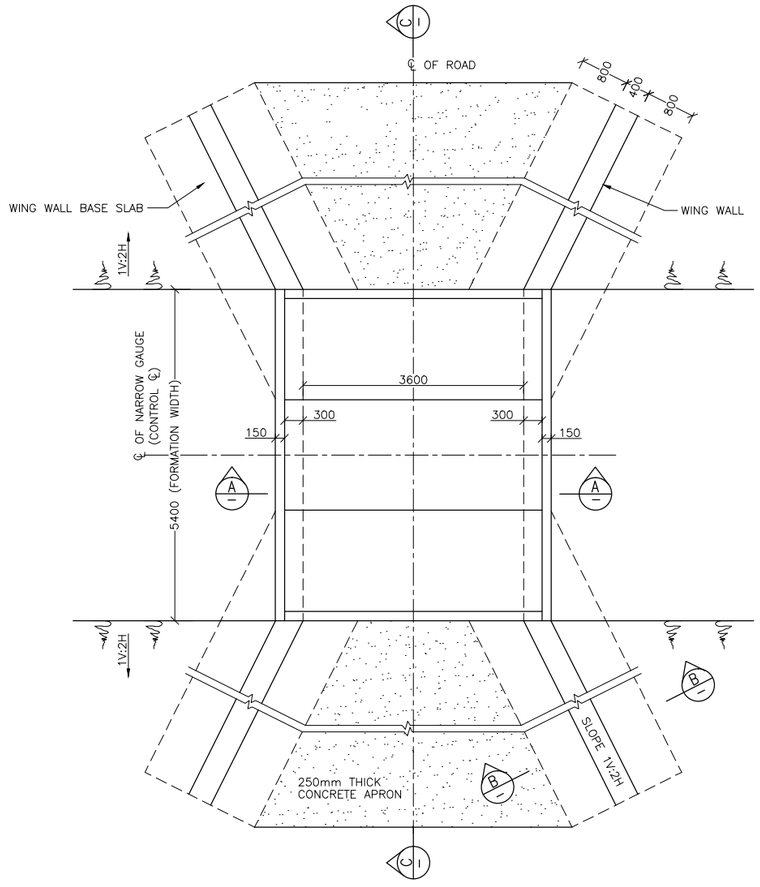

TYPICAL PLAN – SINGLE CELL
SCALE 1:50

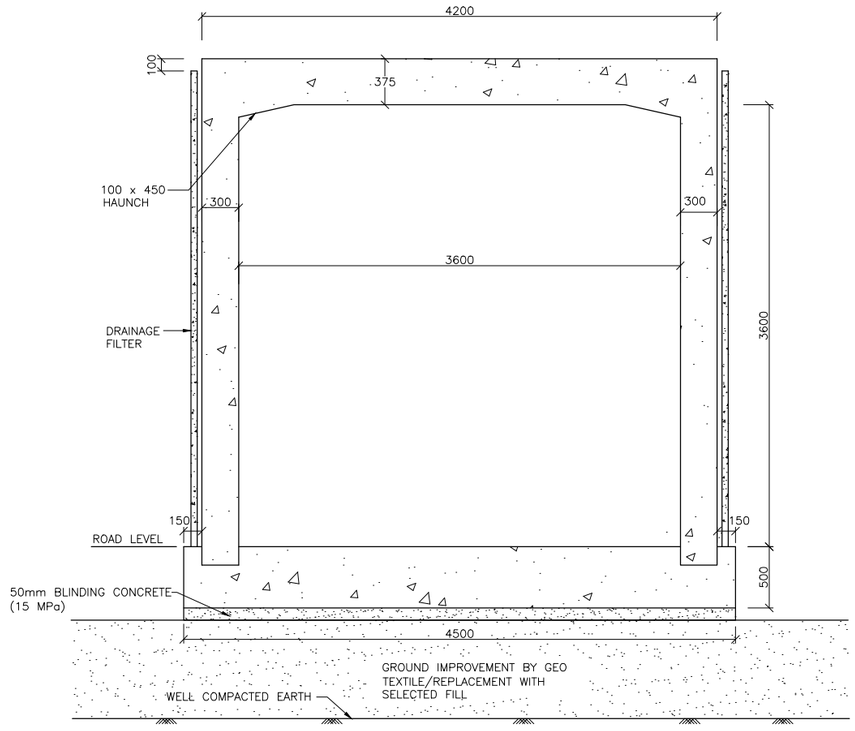

SECTION AA
SCALE–1:25

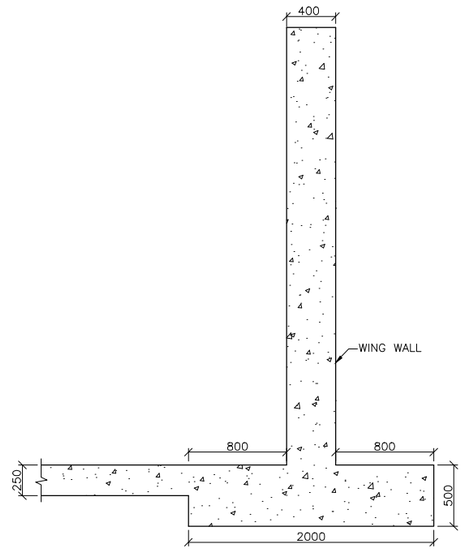

SECTION BB
SCALE 1:25

1 : 50 0 1000 2000mm
1 : 25 0 500 1000mm

ISSUED FOR USE
NOT FOR CONSTRUCTION

REV	BY	DATE	DESCRIPTION	CKD	APP
0	SK	18/12/12	ISSUED FOR USE	RA	RB

REVISIONS

DRAWN	SYAM	18/12/12
DRAFTING CHECK	V RAMESH	18/12/12
ENG. APPROVED	P V S SARMA	18/12/12
PROJECT MANAGER	RICHARD BROMILOW	18/12/12
RPEQ APPROVAL SIGNED:	RUPESH ABBEY	18/12/12
NAME:	RUPESH ABBEY	
RPEQ No:	09126	

calibre
Calibre Operations Pty. Ltd.
Ground Floor, 545 Queen St
Brisbane QLD 4000
Australia
Tel: +61 (0)7 3001 6000
Fax: +61 (0)7 3001 6050

aarvee associates
Aarvee Associates Pty. Ltd.
Suite 39, Level 22, 69 Ann St
Brisbane QLD 4000
Australia
Tel: +61 (0)7 3112 5297
Fax: +61 (0)7 3112 5101

adani™

THIS DRAWING CONTAINS CONFIDENTIAL INFORMATION TO CALIBRE OPERATIONS PTY. LTD. & ITS AFFILIATED PARTIES. THE CLIENT HAS THE RIGHT TO USE THE INFORMATION CONTAINED IN THIS DRAWING PURSUANT TO CONTRACT BETWEEN CLIENT AND CALIBRE OPERATIONS PTY. LTD.

ORIGINAL SIZE A1

CARMICHAEL COAL MINE AND RAIL PROJECT
ADANI CLIENT'S ENGINEER - RAIL
STRUCTURAL - BRIDGE
TYPICAL BOX CULVERT DETAILS

MASTER COPY

PROJECT No. CARP12033
DRG No. CARP12033-1000-DWG-S-060
REV 0

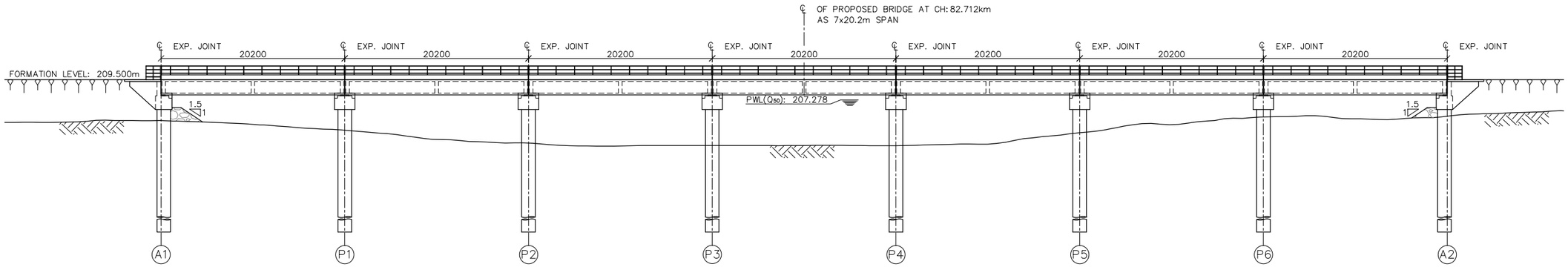

	A1	P1	P2	P3	P4	P5	P6	A2
F.L.–S.L. (m)	4.494	5.563	6.968	7.245	7.260	5.835	4.103	4.015
SURFACE LEVELS (m)	205.006	203.937	202.532	202.255	202.240	203.665	205.397	205.485
CHAINAGE (km)	82.641 ABUTMENT–1	82.661 PIER–1	82.681 PIER–2	82.701 PIER–3	82.722 PIER–4	82.742 PIER–5	82.762 PIER–6	82.782 ABUTMENT–2

ELEVATION

SCALE 1:250

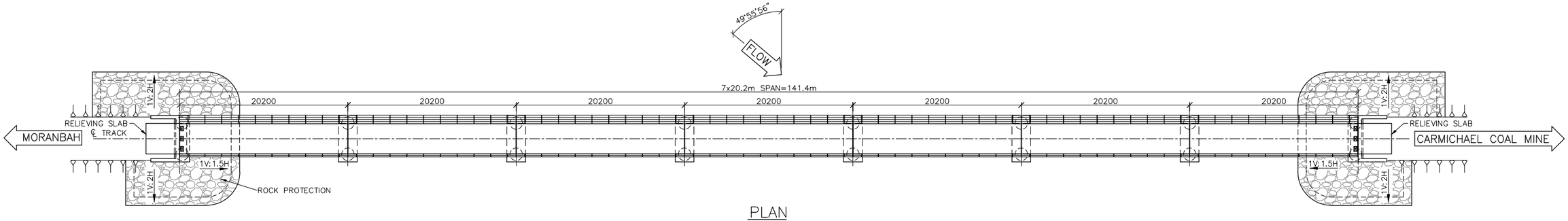

PLAN

SCALE 1:250

GENERAL NOTES:

1. ALL DIMENSIONS ARE IN MILLIMETRES UNLESS NOTED OTHERWISE.
2. CONCRETE GRADE SHALL BE AS FOLLOWS.
   CAST IN SITU – S40
   PRECAST – S50
3. CLEAR COVER TO REINFORCEMENT ARE AS FOLLOWS.
   PILES – 85mm
   HEAD STOCK – 90mm
4. EXPOSURE CLASSIFICATION B2
5. PILES SHALL BE 1500mm DIAMETER BORED PILES. STEEL LINERS TO BE USED AS PER SITE REQUIREMENT (TEMPORARY STEEL LINER MAY BE USED UP TO 3m DEPTH).
6. ALL REINFORCING BARS SHALL BE D500N IN ACCORDANCE WITH AS/NZS 4671:2001
7. MAXIMUM ULTIMATE DESIGN LOAD PER TYPICAL PILE FOR:
   ABUTMENT A1 & A2 – 360T
   PIER (2 PILE GROUP WITHOUT PILE CAP) AT P1,P2,P3,P4 & P5 – 573T
   PIER (2 PILE GROUP WITHOUT PILE CAP) AT P6 – 540T

REFERENCE DRAWINGS:

CARP12033–1000–DWG–S–031	TYPICAL 19.6m RAIL BRIDGE GIRDER – SHEET 1
CARP12033–1000–DWG–S–032	TYPICAL 19.6m RAIL BRIDGE GIRDER – SHEET 2
CARP12033–1000–DWG–S–040	TYPICAL SCOUR PROTECTION DETAILS
CARP12033–1000–DWG–S–028	TYPICAL DETAILS OF CAST IN PLACE BORED PILE
CARP12033–1000–DWG–S–024	TYPICAL ABUTMENT – 2 PILE GROUP – WITHOUT PILE CAP
CARP12033–1000–DWG–S–026	TYPICAL PIER – 2 PILE GROUP – WITHOUT PILE CAP

1 : 250 0 2 4 6 8 10m

ISSUED FOR USE
NOT FOR CONSTRUCTION

REVISIONS

REV	BY	DATE	DESCRIPTION	CKD	APP
0	SK	18/12/12	ISSUED FOR USE	RA	RB

DRAWN	SYAM	18/12/12
DRAFTING CHECK	V RAMESH	18/12/12
ENG. APPROVED	P V S SARMA	18/12/12
PROJECT MANAGER	RICHARD BROMILOW	18/12/12
RPEQ APPROVAL SIGNED:	RUPESH ABBEY	18/12/12
NAME:	RUPESH ABBEY	
RPEQ No:	09126	

calibre
Calibre Operations Pty. Ltd.
Ground Floor, 545 Queen St
Brisbane QLD 4000
Australia
Tel: +61 (0)7 3001 6000
Fax: +61 (0)7 3001 6050

aarvee associates
Aarvee Associates Pty. Ltd.
Suite 39, Level 22, 69 Ann St
Brisbane QLD 4000
Australia
Tel: +61 (0)7 3112 5297
Fax: +61 (0)7 3112 5101

adani™

THIS DRAWING CONTAINS CONFIDENTIAL INFORMATION TO CALIBRE OPERATIONS PTY. LTD. & ITS AFFILIATED PARTIES. THE CLIENT HAS THE RIGHT TO USE THE INFORMATION CONTAINED IN THIS DRAWING PURSUANT TO CONTRACT BETWEEN CLIENT AND CALIBRE OPERATIONS PTY. LTD.

ORIGINAL SIZE A1

CARMICHAEL COAL MINE AND RAIL PROJECT
ADANI CLIENT'S ENGINEER - RAIL
STRUCTURAL - BRIDGE
PLAN AND ELEVATION - LOGAN CREEK - CH 82.712

MASTER COPY

PROJECT No. CARP12033

DRG No. CARP12033-1000-DWG-S-101

REV 0

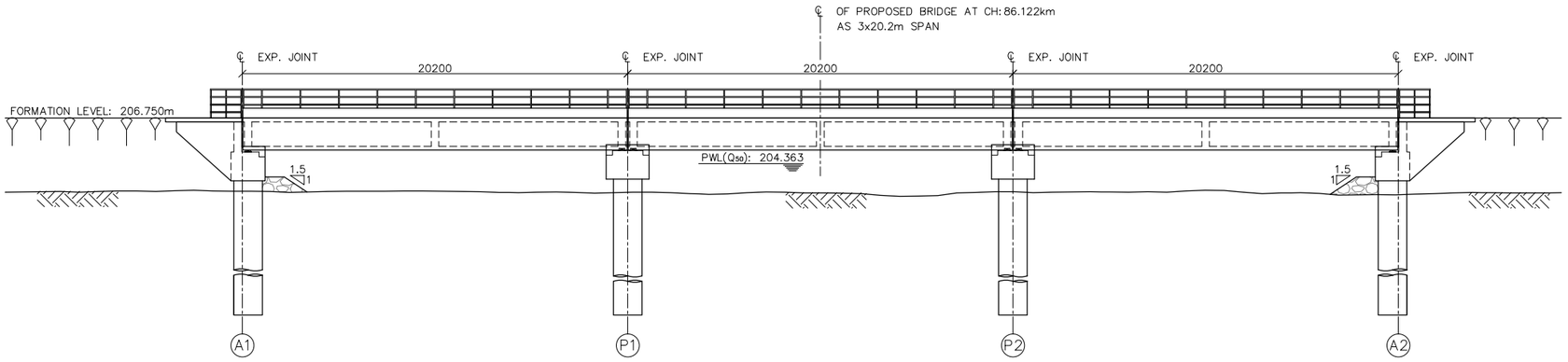

	A1		P1		P2		A2
F.L.–S.L. (m)	3.835		3.895		3.862		4.023
SURFACE LEVELS (m)	202.915		202.855		202.888		202.727
CHAINAGE (km)	86.091	ABUTMENT–1	86.111	PIER–1	86.132	PIER–2	86.152 ABUTMENT–2

ELEVATION

SCALE 1:150

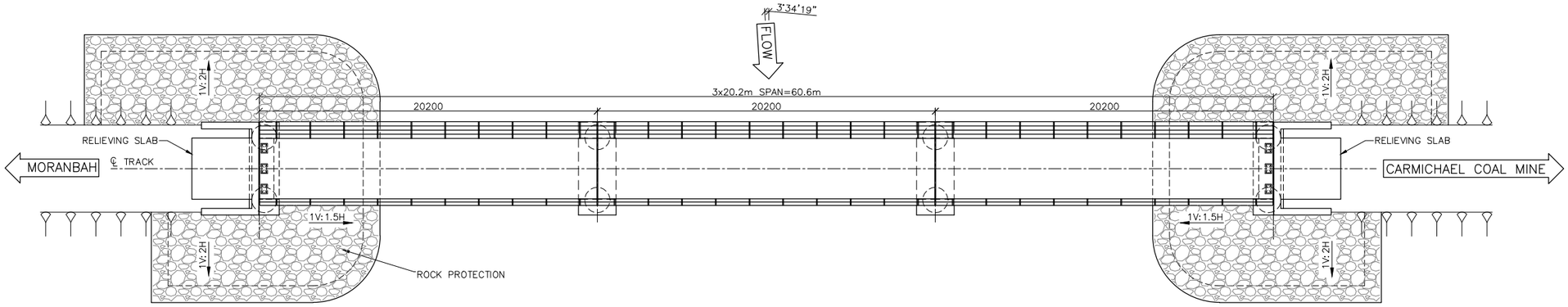

PLAN

SCALE 1:150

GENERAL NOTES:

1. ALL DIMENSIONS ARE IN MILLIMETRES UNLESS NOTED OTHERWISE.
2. CONCRETE GRADE SHALL BE AS FOLLOWS.
   CAST IN SITU – S40
   PRECAST – S50
3. CLEAR COVER TO REINFORCEMENT ARE AS FOLLOWS.
   PILES – 85mm
   HEAD STOCK – 90mm
4. EXPOSURE CLASSIFICATION B2
5. PILES SHALL BE 1500mm DIAMETER BORED PILES. STEEL LINERS TO BE USED AS PER SITE REQUIREMENT (TEMPORARY STEEL LINER MAY BE USED UP TO 3m DEPTH).
6. ALL REINFORCING BARS SHALL BE D500N IN ACCORDANCE WITH AS/NZS 4671:2001
7. MAXIMUM ULTIMATE DESIGN LOAD PER TYPICAL PILE FOR:
   ABUTMENT A1 & A2 – 360T
   PIER (2 PILE GROUP WITHOUT PILE CAP) AT P1 & P2 – 540T

REFERENCE DRAWINGS:

CARP12033–1000–DWG–S–031	TYPICAL 19.6m RAIL BRIDGE GIRDER – SHEET 1
CARP12033–1000–DWG–S–032	TYPICAL 19.6m RAIL BRIDGE GIRDER – SHEET 2
CARP12033–1000–DWG–S–040	TYPICAL SCOUR PROTECTION DETAILS
CARP12033–1000–DWG–S–028	TYPICAL DETAILS OF CAST IN PLACE BORED PILE
CARP12033–1000–DWG–S–024	TYPICAL ABUTMENT – 2 PILE GROUP – WITHOUT PILE CAP
CARP12033–1000–DWG–S–026	TYPICAL PIER – 2 PILE GROUP – WITHOUT PILE CAP

1 : 150 0 2 4 6 8m

ISSUED FOR USE
NOT FOR CONSTRUCTION

REVISIONS

REV	BY	DATE	DESCRIPTION	CKD	APP
0	SK	18/12/12	ISSUED FOR USE	RA	RB

DRAWN	SYAM	18/12/12
DRAFTING CHECK	V RAMESH	18/12/12
ENG. APPROVED	P V S SARMA	18/12/12
PROJECT MANAGER	RICHARD BROMILOW	18/12/12
RPEQ APPROVAL SIGNED:	RUPESH ABBEY	18/12/12
NAME:	RUPESH ABBEY	
RPEQ No:	09126	

calibre
Calibre Operations Pty. Ltd.
Ground Floor, 545 Queen St
Brisbane QLD 4000
Australia
Tel: +61 (0)7 3001 6000
Fax: +61 (0)7 3001 6050

aarvee associates
Aarvee Associates Pty. Ltd.
Suite 39, Level 22, 69 Ann St
Brisbane QLD 4000
Australia
Tel: +61 (0)7 3112 5297
Fax: +61 (0)7 3112 5101

adani™

THIS DRAWING CONTAINS CONFIDENTIAL INFORMATION TO CALIBRE OPERATIONS PTY. LTD. & ITS AFFILIATED PARTIES. THE CLIENT HAS THE RIGHT TO USE THE INFORMATION CONTAINED IN THIS DRAWING PURSUANT TO CONTRACT BETWEEN CLIENT AND CALIBRE OPERATIONS PTY. LTD.

ORIGINAL SIZE A1

CARMICHAEL COAL MINE AND RAIL PROJECT
ADANI CLIENT'S ENGINEER - RAIL
STRUCTURAL - BRIDGE
PLAN AND ELEVATION - UNNAMED CREEK- CH 86.122

MASTER COPY

PROJECT No. CARP12033

DRG No. CARP12033-1000-DWG-S-102 REV 0

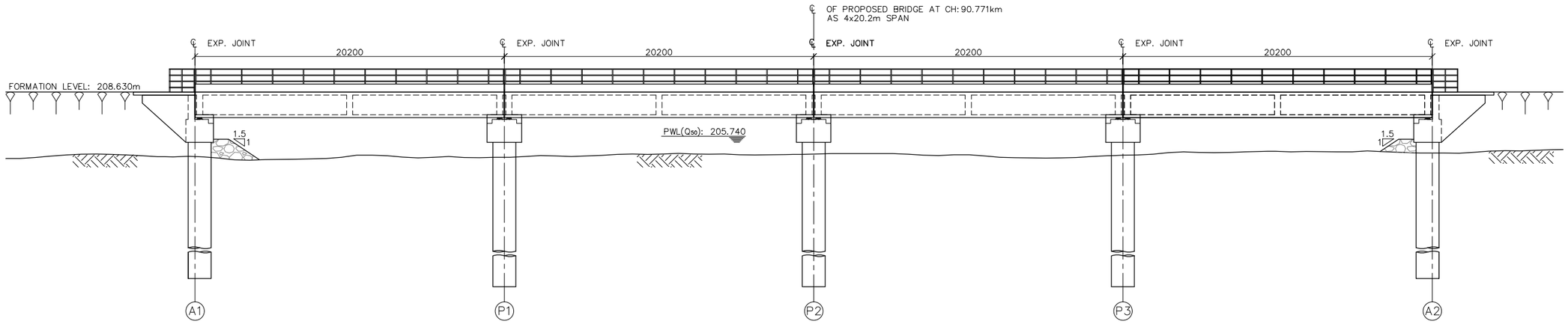

F.L.–S.L. (m)	4.219	4.256	4.044	4.124	3.981
SURFACE LEVELS (m)	204.411	204.374	204.586	204.506	204.649
CHAINAGE (km)	90.730 ABUTMENT–1	90.750 PIER–1	90.771 PIER–2	90.791 PIER–3	90.811 ABUTMENT–2

ELEVATION

SCALE 1:150

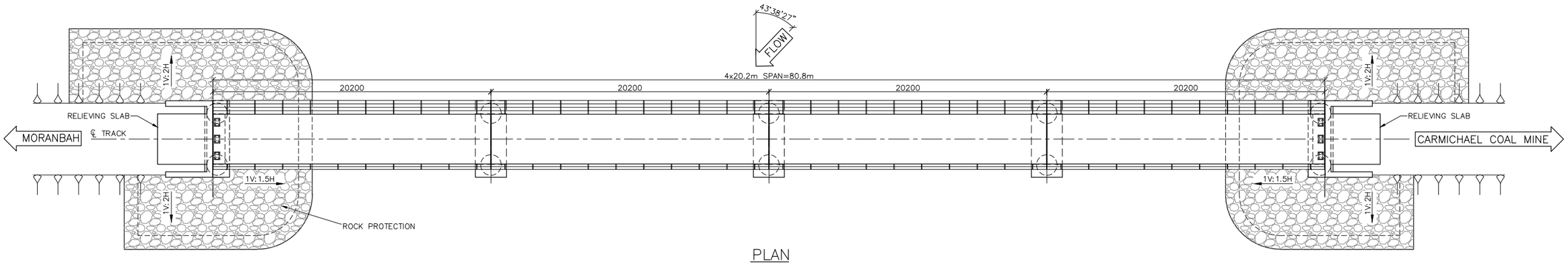

PLAN

SCALE 1:150

GENERAL NOTES:

1. ALL DIMENSIONS ARE IN MILLIMETRES UNLESS NOTED OTHERWISE.
2. CONCRETE GRADE SHALL BE AS FOLLOWS.
   CAST IN SITU – S40
   PRECAST – S50
3. CLEAR COVER TO REINFORCEMENT ARE AS FOLLOWS.
   PILES – 85mm
   HEAD STOCK – 90mm
4. EXPOSURE CLASSIFICATION B2
5. PILES SHALL BE 1500mm DIAMETER BORED PILES. STEEL LINERS TO BE USED AS PER SITE REQUIREMENT (TEMPORARY STEEL LINER MAY BE USED UP TO 3m DEPTH).
6. ALL REINFORCING BARS SHALL BE D500N IN ACCORDANCE WITH AS/NZS 4671:2001
7. MAXIMUM ULTIMATE DESIGN LOAD PER TYPICAL PILE FOR:
   ABUTMENT A1 & A2 – 360T
   PIER (2 PILE GROUP WITHOUT PILE CAP) AT ALL LOCATIONS – 540T

REFERENCE DRAWINGS:

CARP12033–1000–DWG–S–031	TYPICAL 19.6m RAIL BRIDGE GIRDER – SHEET 1
CARP12033–1000–DWG–S–032	TYPICAL 19.6m RAIL BRIDGE GIRDER – SHEET 2
CARP12033–1000–DWG–S–040	TYPICAL SCOUR PROTECTION DETAILS
CARP12033–1000–DWG–S–028	TYPICAL DETAILS OF CAST IN PLACE BORED PILE
CARP12033–1000–DWG–S–024	TYPICAL ABUTMENT – 2 PILE GROUP – WITHOUT PILE CAP
CARP12033–1000–DWG–S–026	TYPICAL PIER – 2 PILE GROUP – WITHOUT PILE CAP

1 : 150 0 2 4 6 8m

ISSUED FOR USE
NOT FOR CONSTRUCTION

REVISIONS

REV	BY	DATE	DESCRIPTION	CKD	APP
0	SK	18/12/12	ISSUED FOR USE	RA	RB

DRAWN	SYAM	18/12/12
DRAFTING CHECK	V RAMESH	18/12/12
ENG. APPROVED	P V S SARMA	18/12/12
PROJECT MANAGER	RICHARD BROMILOW	18/12/12
RPEQ APPROVAL SIGNED: RUPESH ABBEY NAME: RUPESH ABBEY RPEQ No: 09126		18/12/12

calibre
Calibre Operations Pty. Ltd.
Ground Floor, 545 Queen St
Brisbane QLD 4000
Australia
Tel: +61 (0)7 3001 6000
Fax: +61 (0)7 3001 6050

aarvee associates
Aarvee Associates Pty. Ltd.
Suite 39, Level 22, 69 Ann St
Brisbane QLD 4000
Australia
Tel: +61 (0)7 3112 5297
Fax: +61 (0)7 3112 5101

adani™

THIS DRAWING CONTAINS CONFIDENTIAL INFORMATION TO CALIBRE OPERATIONS PTY. LTD. & ITS AFFILIATED PARTIES. THE CLIENT HAS THE RIGHT TO USE THE INFORMATION CONTAINED IN THIS DRAWING PURSUANT TO CONTRACT BETWEEN CLIENT AND CALIBRE OPERATIONS PTY. LTD.

ORIGINAL SIZE A1

CARMICHAEL COAL MINE AND RAIL PROJECT
ADANI CLIENT'S ENGINEER - RAIL
STRUCTURAL - BRIDGE
PLAN AND ELEVATION - UNNAMED CREEK - CH 90.771

MASTER COPY

PROJECT No. CARP12033

DRG No. CARP12033-1000-DWG-S-103 REV 0

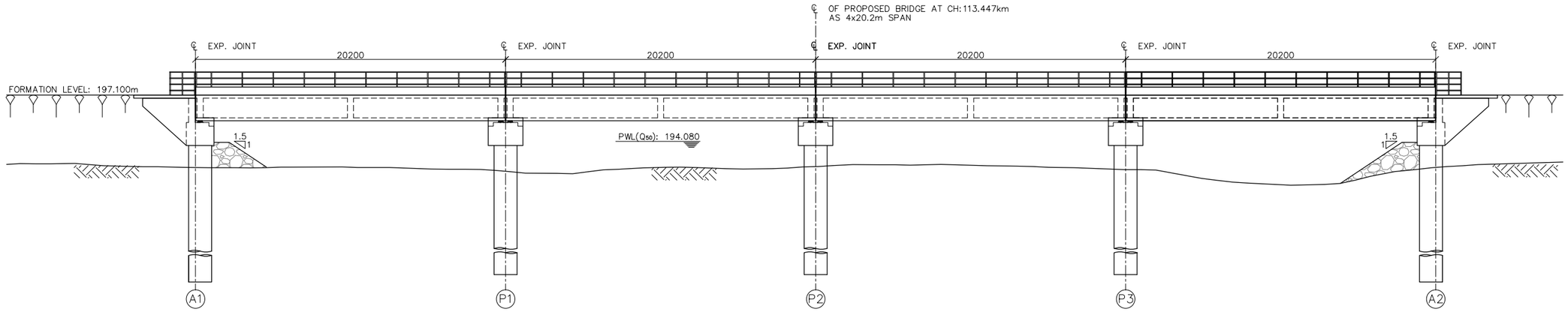

F.L.–S.L. (m)	4.717		4.965		4.663		4.852		4.711	
SURFACE LEVELS (m)	193.119		192.135		192.437		192.248		192.389	
CHAINAGE (km)	113.406	ABUTMENT–1	113.426	PIER–1	113.447	PIER–2	113.467	PIER–3	113.487	ABUTMENT–2

ELEVATION

SCALE 1:150

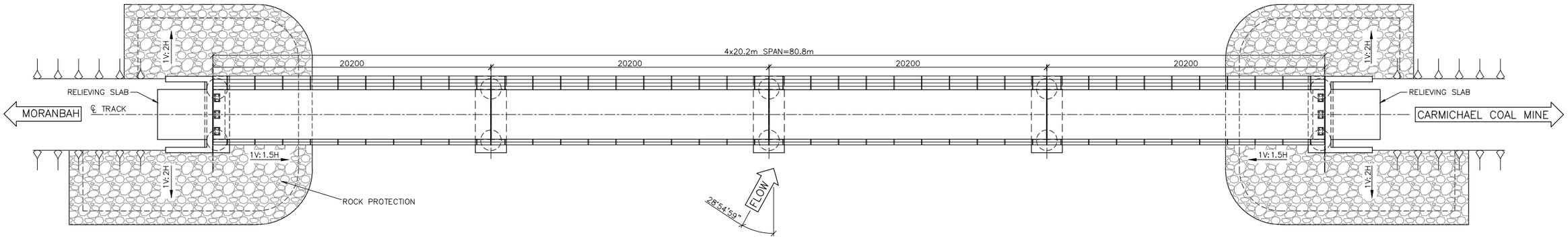

PLAN

SCALE 1:150

GENERAL NOTES:

1. ALL DIMENSIONS ARE IN MILLIMETRES UNLESS NOTED OTHERWISE.
2. CONCRETE GRADE SHALL BE AS FOLLOWS.
   CAST IN SITU – S40
   PRECAST – S50
3. CLEAR COVER TO REINFORCEMENT ARE AS FOLLOWS.
   PILES – 85mm
   HEAD STOCK – 90mm
4. EXPOSURE CLASSIFICATION B2
5. PILES SHALL BE 1500mm DIAMETER BORED PILES. STEEL LINERS TO BE USED AS PER SITE REQUIREMENT (TEMPORARY STEEL LINER MAY BE USED UP TO 3m DEPTH).
6. ALL REINFORCING BARS SHALL BE D500N IN ACCORDANCE WITH AS/NZS 4671:2001
7. MAXIMUM ULTIMATE DESIGN LOAD PER TYPICAL PILE FOR:
   ABUTMENT A1 & A2 – 360T
   PIER (2 PILE GROUP WITHOUT PILE CAP) AT ALL LOCATIONS – 540T

REFERENCE DRAWINGS:

CARP12033–1000–DWG–S–031	TYPICAL 19.6m RAIL BRIDGE GIRDER – SHEET 1
CARP12033–1000–DWG–S–032	TYPICAL 19.6m RAIL BRIDGE GIRDER – SHEET 2
CARP12033–1000–DWG–S–040	TYPICAL SCOUR PROTECTION DETAILS
CARP12033–1000–DWG–S–028	TYPICAL DETAILS OF CAST IN PLACE BORED PILE
CARP12033–1000–DWG–S–024	TYPICAL ABUTMENT – 2 PILE GROUP – WITHOUT PILE CAP
CARP12033–1000–DWG–S–026	TYPICAL PIER – 2 PILE GROUP – WITHOUT PILECAP

1 : 150 0 2 4 6 8m

ISSUED FOR USE
NOT FOR CONSTRUCTION

REVISIONS

REV	BY	DATE	DESCRIPTION	CKD	APP
0	SK	18/12/12	ISSUED FOR USE	RA	RB

DRAWN	SYAM	18/12/12
DRAFTING CHECK	V RAMESH	18/12/12
ENG. APPROVED	P V S SARMA	18/12/12
PROJECT MANAGER	RICHARD BROMILOW	18/12/12
RPEQ APPROVAL SIGNED: RUPESH ABBEY NAME: RUPESH ABBEY RPEQ No: 09126		18/12/12

calibre
Calibre Operations Pty. Ltd.
Ground Floor, 545 Queen St
Brisbane QLD 4000
Australia
Tel: +61 (0)7 3001 6000
Fax: +61 (0)7 3001 6050

aarvee associates
Aarvee Associates Pty. Ltd.
Suite 39, Level 22, 69 Ann St
Brisbane QLD 4000
Australia
Tel: +61 (0)7 3112 5297
Fax: +61 (0)7 3112 5101

adani™

THIS DRAWING CONTAINS CONFIDENTIAL INFORMATION TO CALIBRE OPERATIONS PTY. LTD. & ITS AFFILIATED PARTIES. THE CLIENT HAS THE RIGHT TO USE THE INFORMATION CONTAINED IN THIS DRAWING PURSUANT TO CONTRACT BETWEEN CLIENT AND CALIBRE OPERATIONS PTY. LTD.

ORIGINAL SIZE A1

CARMICHAEL COAL MINE AND RAIL PROJECT
ADANI CLIENT'S ENGINEER - RAIL
STRUCTURAL - BRIDGE
PLAN AND ELEVATION - GOWRIE CREEK - CH 113.447

MASTER COPY

PROJECT No. CARP12033

DRG No. CARP12033-1000-DWG-S-104 REV 0

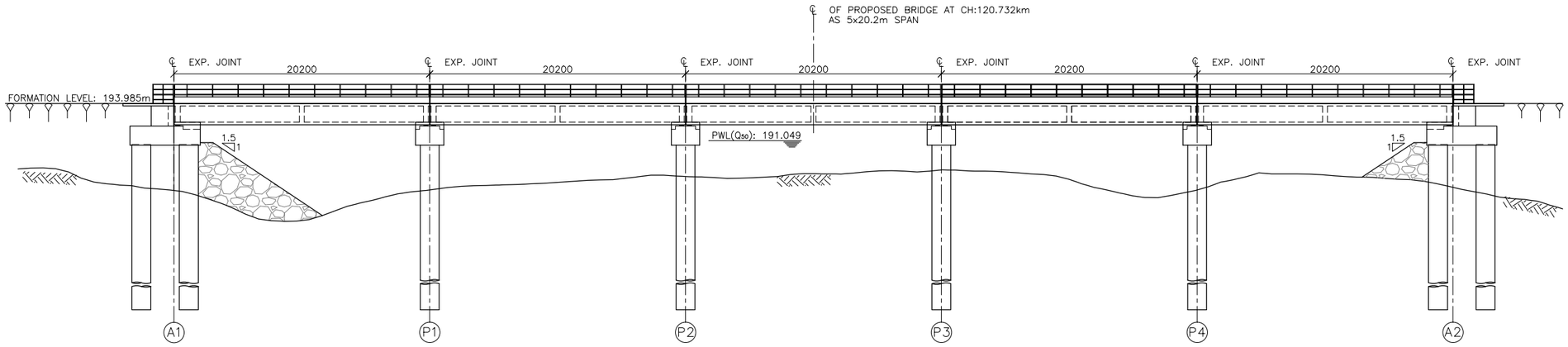

	A1	P1	P2	P3	P4	A2
F.L.–S.L. (m)	6.865	6.821	5.765	5.250	6.825	6.617
SURFACE LEVELS (m)	187.120	187.164	188.220	188.735	187.160	187.368
CHAINAGE (km)	120.681 ABUTMENT–1	120.701 PIER–1	120.721 PIER–2	120.742 PIER–3	120.762 PIER–4	120.782 ABUTMENT–2

ELEVATION

SCALE 1:200

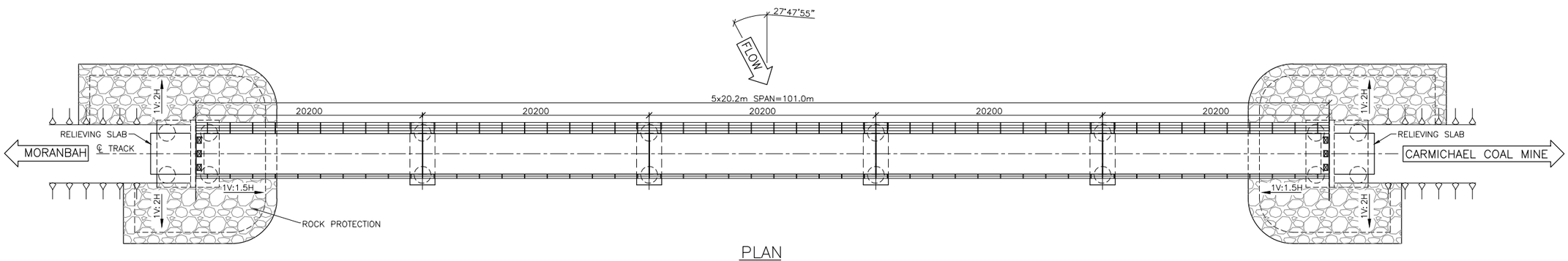

PLAN

SCALE 1:200

GENERAL NOTES:

1. ALL DIMENSIONS ARE IN MILLIMETRES UNLESS NOTED OTHERWISE.
2. CONCRETE GRADE SHALL BE AS FOLLOWS.
   CAST IN SITU – S40
   PRECAST – S50
3. CLEAR COVER TO REINFORCEMENT ARE AS FOLLOWS.
   PILES – 85mm
   HEAD STOCK – 90mm
4. EXPOSURE CLASSIFICATION B2
5. PILES SHALL BE 1500mm DIAMETER BORED PILES. STEEL LINERS TO BE USED AS PER SITE REQUIREMENT (TEMPORARY STEEL LINER MAY BE USED UP TO 3m DEPTH).
6. ALL REINFORCING BARS SHALL BE D500N IN ACCORDANCE WITH AS/NZS 4671:2001
7. MAXIMUM ULTIMATE DESIGN LOAD PER TYPICAL PILE FOR:
   ABUTMENT A1 & A2 – 330T
   PIER (2 PILE GROUP WITHOUT PILE CAP) AT P1,P2 & P4 – 573T
   PIER (2 PILE GROUP WITHOUT PILE CAP) AT P3 – 545T

REFERENCE DRAWINGS:

CARP12033–1000–DWG–S–031	TYPICAL 19.6m RAIL BRIDGE GIRDER – SHEET 1
CARP12033–1000–DWG–S–032	TYPICAL 19.6m RAIL BRIDGE GIRDER – SHEET 2
CARP12033–1000–DWG–S–040	TYPICAL SCOUR PROTECTION DETAILS
CARP12033–1000–DWG–S–028	TYPICAL DETAILS OF CAST IN PLACE BORED PILE
CARP12033–1000–DWG–S–023	TYPICAL ABUTMENT – 4 PILE GROUP – WITHOUT PILE CAP
CARP12033–1000–DWG–S–026	TYPICAL PIER – 2 PILE GROUP WITHOUT – PILE CAP

1 : 200 0 2 4 6 8 10m

ISSUED FOR USE
NOT FOR CONSTRUCTION

REVISIONS

REV	BY	DATE	DESCRIPTION	CKD	APP
0	SK	18/12/12	ISSUED FOR USE	RA	RB

DRAWN	SYAM	18/12/12
DRAFTING CHECK	V RAMESH	18/12/12
ENG. APPROVED	P V S SARMA	18/12/12
PROJECT MANAGER	RICHARD BROMILOW	18/12/12
RPEQ APPROVAL SIGNED:	RUPESH ABBEY	18/12/12
NAME:	RUPESH ABBEY	
RPEQ No:	9126	

calibre
Calibre Operations Pty. Ltd.
Ground Floor, 545 Queen St
Brisbane QLD 4000
Australia
Tel: +61 (0)7 3001 6000
Fax: +61 (0)7 3001 6050

aarvee associates
Aarvee Associates Pty. Ltd.
Suite 39, Level 22, 69 Ann St
Brisbane QLD 4000
Australia
Tel: +61 (0)7 3112 5297
Fax: +61 (0)7 3112 5101

adani

THIS DRAWING CONTAINS CONFIDENTIAL INFORMATION TO CALIBRE OPERATIONS PTY. LTD. & ITS AFFILIATED PARTIES. THE CLIENT HAS THE RIGHT TO USE THE INFORMATION CONTAINED IN THIS DRAWING PURSUANT TO CONTRACT BETWEEN CLIENT AND CALIBRE OPERATIONS PTY. LTD.

ORIGINAL SIZE A1

CARMICHAEL COAL MINE AND RAIL PROJECT
ADANI CLIENT'S ENGINEER - RAIL
STRUCTURAL - BRIDGE
PLAN AND ELEVATION - MISTAKE CREEK - CH 120.732

MASTER COPY

PROJECT No. CARP12033

DRG No. CARP12033-1000-DWG-S-105

REV 0

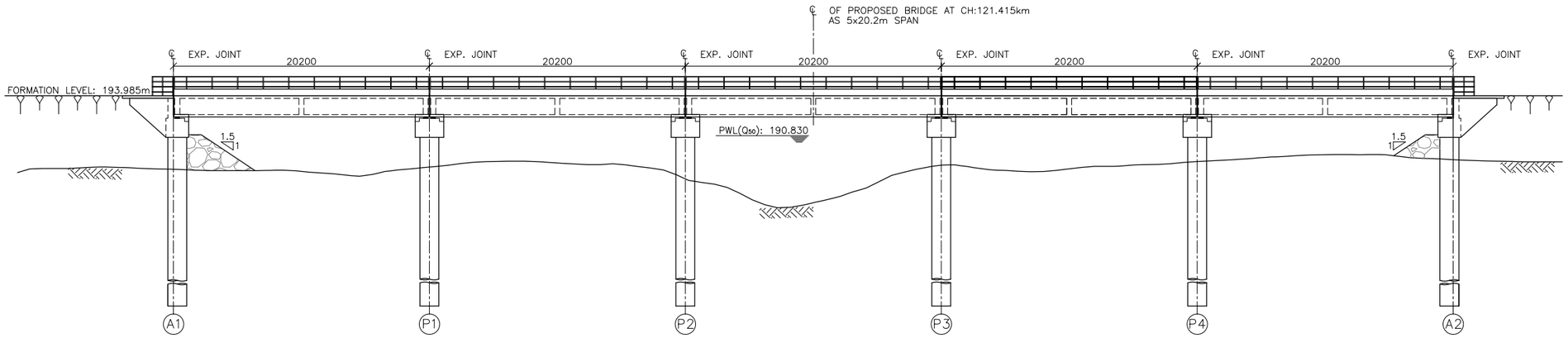

	A1	P1	P2	P3	P4	A2
F.L.–S.L. (m)	5.801	5.625	6.561	5.480	5.190	5.050
SURFACE LEVELS (m)	188.184	188.360	187.424	188.505	188.795	188.935
CHAINAGE (km)	121.364 ABUTMENT–1	121.384 PIER–1	121.404 PIER–2	121.425 PIER–3	121.445 PIER–4	121.465 ABUTMENT–2

ELEVATION

SCALE 1:200

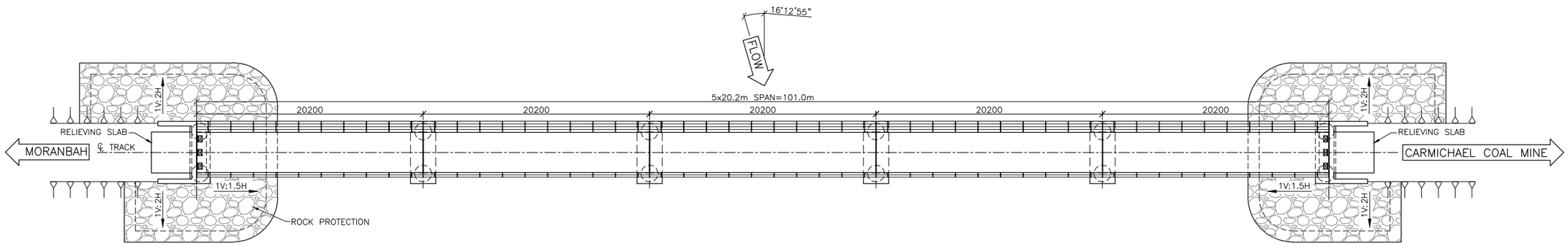

PLAN

SCALE 1:200

GENERAL NOTES:

1. ALL DIMENSIONS ARE IN MILLIMETRES UNLESS NOTED OTHERWISE.
2. CONCRETE GRADE SHALL BE AS FOLLOWS.
   CAST IN SITU – S40
   PRECAST – S50
3. CLEAR COVER TO REINFORCEMENT ARE AS FOLLOWS.
   PILES – 85mm
   HEAD STOCK – 90mm
4. EXPOSURE CLASSIFICATION B2
5. PILES SHALL BE 1500mm DIAMETER BORED PILES. STEEL LINERS TO BE USED AS PER SITE REQUIREMENT (TEMPORARY STEEL LINER MAY BE USED UP TO 3m DEPTH).
6. ALL REINFORCING BARS SHALL BE D500N IN ACCORDANCE WITH AS/NZS 4671:2001
7. MAXIMUM ULTIMATE DESIGN LOAD PER TYPICAL PILE FOR:
   ABUTMENT A1 & A2 – 360T
   PIER (2 PILE GROUP WITHOUT PILE CAP) AT P1 & P2 – 573T
   PIER (2 PILE GROUP WITHOUT PILE CAP) AT P3 & P4 – 545T

REFERENCE DRAWINGS:

CARP12033–1000–DWG–S–031	TYPICAL 19.6m RAIL BRIDGE GIRDER – SHEET 1
CARP12033–1000–DWG–S–032	TYPICAL 19.6m RAIL BRIDGE GIRDER – SHEET 2
CARP12033–1000–DWG–S–040	TYPICAL SCOUR PROTECTION DETAILS
CARP12033–1000–DWG–S–028	TYPICAL DETAILS OF CAST IN PLACE BORED PILE
CARP12033–1000–DWG–S–024	TYPICAL ABUTMENT – 2 PILE GROUP – WITHOUT PILE CAP
CARP12033–1000–DWG–S–026	TYPICAL PIER – 2 PILE GROUP – WITHOUT PILE CAP

1 : 200 0 2 4 6 8 10m

ISSUED FOR USE
NOT FOR CONSTRUCTION

REVISIONS

REV	BY	DATE	DESCRIPTION	CKD	APP
0	SK	18/12/12	ISSUED FOR USE	RA	RB

DRAWN	SYAM	18/12/12
DRAFTING CHECK	V RAMESH	18/12/12
ENG. APPROVED	P V S SARMA	18/12/12
PROJECT MANAGER	RICHARD BROMILOW	18/12/12
RPEQ APPROVAL SIGNED:	RUPESH ABBEY	18/12/12
NAME:	RUPESH ABBEY	
RPEQ No:	09126	

calibre
Calibre Operations Pty. Ltd.
Ground Floor, 545 Queen St
Brisbane QLD 4000
Australia
Tel: +61 (0)7 3001 6000
Fax: +61 (0)7 3001 6050

aarvee associates
Aarvee Associates Pty. Ltd.
Suite 39, Level 22, 69 Ann St
Brisbane QLD 4000
Australia
Tel: +61 (0)7 3112 5297
Fax: +61 (0)7 3112 5101

adani™
THIS DRAWING CONTAINS CONFIDENTIAL INFORMATION TO CALIBRE OPERATIONS PTY. LTD. & ITS AFFILIATED PARTIES. THE CLIENT HAS THE RIGHT TO USE THE INFORMATION CONTAINED IN THIS DRAWING PURSUANT TO CONTRACT BETWEEN CLIENT AND CALIBRE OPERATIONS PTY. LTD.

ORIGINAL SIZE A1

CARMICHAEL COAL MINE AND RAIL PROJECT
ADANI CLIENT'S ENGINEER - RAIL
STRUCTURAL - BRIDGE
PLAN AND ELEVATION - MISTAKE CREEK - CH 121.415

MASTER COPY

PROJECT No. CARP12033

DRG No. CARP12033-1000-DWG-S-106

REV 0

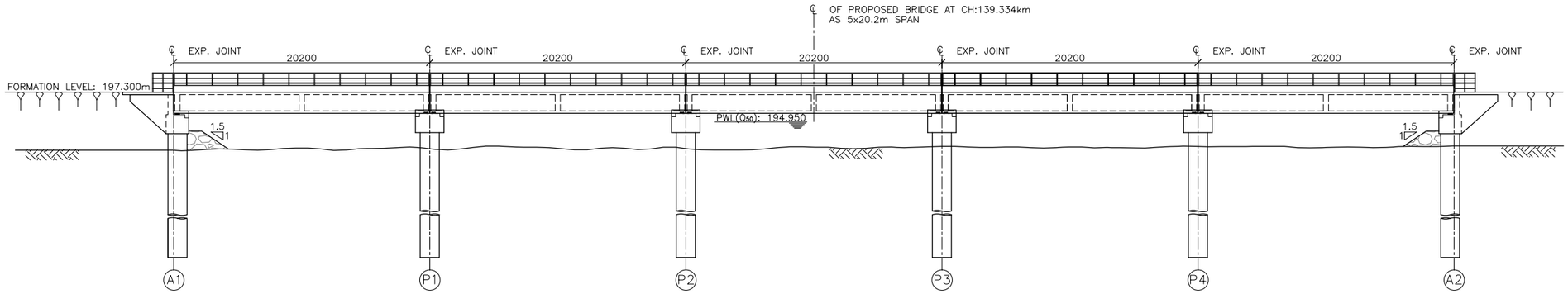

F.L.–S.L. (m)	4.569	4.495	4.459	4.288	4.284	4.253
SURFACE LEVELS (m)	192.731	192.805	192.841	193.012	193.016	193.047
CHAINAGE (km)	139.284 ABUTMENT–1	139.304 PIER–1	139.324 PIER–2	139.344 PIER–3	139.364 PIER–4	139.384 ABUTMENT–2

ELEVATION

SCALE 1:200

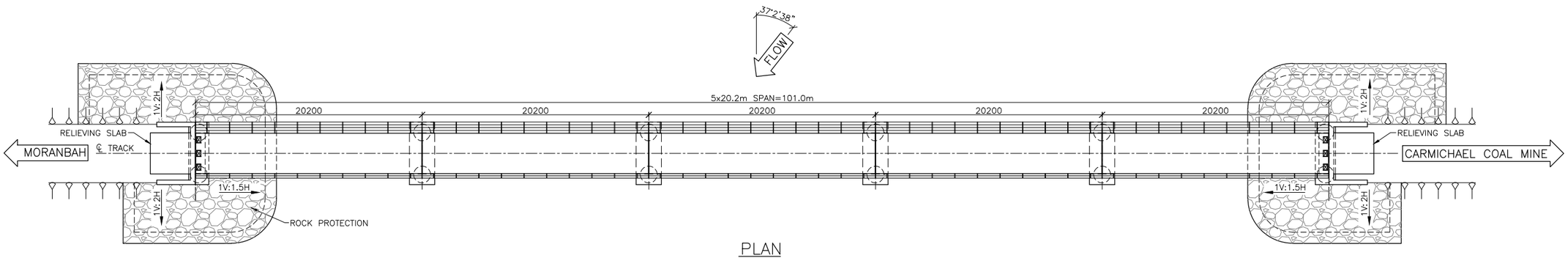

PLAN

SCALE 1:200

GENERAL NOTES:

1. ALL DIMENSIONS ARE IN MILLIMETRES UNLESS NOTED OTHERWISE.
2. CONCRETE GRADE SHALL BE AS FOLLOWS.
   CAST IN SITU – S40
   PRECAST – S50
3. CLEAR COVER TO REINFORCEMENT ARE AS FOLLOWS.
   PILES – 85mm
   HEAD STOCK – 90mm
4. EXPOSURE CLASSIFICATION B2
5. PILES SHALL BE 1500mm DIAMETER BORED PILES. STEEL LINERS TO BE USED AS PER SITE REQUIREMENT (TEMPORARY STEEL LINER MAY BE USED UP TO 3m DEPTH).
6. ALL REINFORCING BARS SHALL BE D500N IN ACCORDANCE WITH AS/NZS 4671:2001
7. MAXIMUM ULTIMATE DESIGN LOAD PER TYPICAL PILE FOR:
   ABUTMENT A1 & A2 – 360T
   PIER (2 PILE GROUP WITHOUT PILE CAP) AT ALL LOCATIONS – 540T

REFERENCE DRAWINGS:

CARP12033–1000–DWG–S–031	TYPICAL 19.6m RAIL BRIDGE GIRDER – SHEET 1
CARP12033–1000–DWG–S–032	TYPICAL 19.6m RAIL BRIDGE GIRDER – SHEET 2
CARP12033–1000–DWG–S–040	TYPICAL SCOUR PROTECTION DETAILS
CARP12033–1000–DWG–S–028	TYPICAL DETAILS OF CAST IN PLACE BORED PILE
CARP12033–1000–DWG–S–024	TYPICAL ABUTMENT – 2 PILE GROUP – WITHOUT PILE CAP
CARP12033–1000–DWG–S–026	TYPICAL PIER – 2 PILE GROUP – WITHOUT PILE CAP

1 : 200 0 2 4 6 8 10m

ISSUED FOR USE
NOT FOR CONSTRUCTION

REVISIONS

REV	BY	DATE	DESCRIPTION	CKD	APP
0	SK	18/12/12	ISSUED FOR USE	RA	RB

DRAWN	SYAM	18/12/12
DRAFTING CHECK	V RAMESH	18/12/12
ENG. APPROVED	P V S SARMA	18/12/12
PROJECT MANAGER	RICHARD BROMILOW	18/12/12
RPEQ APPROVAL SIGNED:	RUPESH ABBEY	18/12/12
NAME:	RUPESH ABBEY	
RPEQ No:	09126	

calibre
Calibre Operations Pty. Ltd.
Ground Floor, 545 Queen St
Brisbane QLD 4000
Australia
Tel: +61 (0)7 3001 6000
Fax: +61 (0)7 3001 6050

aarvee associates
Aarvee Associates Pty. Ltd.
Suite 39, Level 22, 69 Ann St
Brisbane QLD 4000
Australia
Tel: +61 (0)7 3112 5297
Fax: +61 (0)7 3112 5101

adani™
THIS DRAWING CONTAINS CONFIDENTIAL INFORMATION TO CALIBRE OPERATIONS PTY. LTD. & ITS AFFILIATED PARTIES. THE CLIENT HAS THE RIGHT TO USE THE INFORMATION CONTAINED IN THIS DRAWING PURSUANT TO CONTRACT BETWEEN CLIENT AND CALIBRE OPERATIONS PTY. LTD.

ORIGINAL SIZE A1

CARMICHAEL COAL MINE AND RAIL PROJECT
ADANI CLIENT'S ENGINEER - RAIL
STRUCTURAL - BRIDGE
PLAN AND ELEVATION - BELYANDO RIVER - CH 139.334

MASTER COPY

PROJECT No. CARP12033

DRG No. CARP12033-1000-DWG-S-107

REV 0

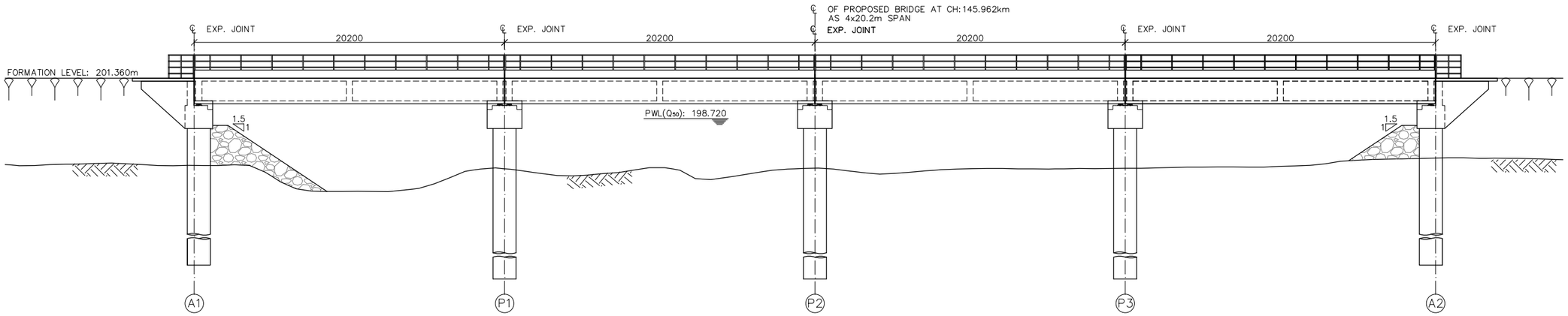

F.L.–S.L. (m)	5.688		5.901		5.861		5.866		5.210	
SURFACE LEVELS (m)	195.672		195.459		195.499		195.494		196.150	
CHAINAGE (km)	145.921	ABUTMENT–1	145.941	PIER–1	145.962	PIER–2	145.982	PIER–3	146.002	ABUTMENT–2

ELEVATION

SCALE 1:150

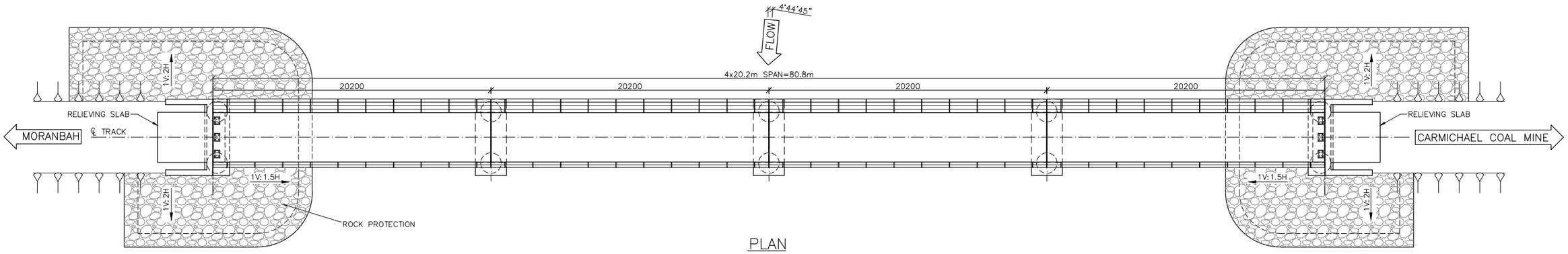

PLAN

SCALE 1:150

GENERAL NOTES:

1. ALL DIMENSIONS ARE IN MILLIMETRES UNLESS NOTED OTHERWISE.
2. CONCRETE GRADE SHALL BE AS FOLLOWS.
   CAST IN SITU – S40
   PRECAST – S50
3. CLEAR COVER TO REINFORCEMENT ARE AS FOLLOWS.
   PILES – 85mm
   HEAD STOCK – 90mm
4. EXPOSURE CLASSIFICATION B2
5. PILES SHALL BE 1500mm DIAMETER BORED PILES. STEEL LINERS TO BE USED AS PER SITE REQUIREMENT (TEMPORARY STEEL LINER MAY BE USED UP TO 11m DEPTH SUBJECT TO SITE SPECIFIC GEOTECHNICAL PARAMETERS).
6. ALL REINFORCING BARS SHALL BE D500N IN ACCORDANCE WITH AS/NZS 4671:2001
7. MAXIMUM ULTIMATE DESIGN LOAD PER TYPICAL PILE FOR:
   ABUTMENT A1 & A2 – 360T
   PIER (2 PILE GROUP WITHOUT PILE CAP) AT ALL LOCATIONS – 573T

REFERENCE DRAWINGS:

CARP12033–1000–DWG–S–031	TYPICAL 19.6m RAIL BRIDGE GIRDER – SHEET 1
CARP12033–1000–DWG–S–032	TYPICAL 19.6m RAIL BRIDGE GIRDER – SHEET 2
CARP12033–1000–DWG–S–040	TYPICAL SCOUR PROTECTION DETAILS
CARP12033–1000–DWG–S–028	TYPICAL DETAILS OF CAST IN PLACE BORED PILE
CARP12033–1000–DWG–S–024	TYPICAL ABUTMENT – 2 PILE GROUP – WITHOUT PILE CAP
CARP12033–1000–DWG–S–026	TYPICAL PIER – 2 PILE GROUP – WITHOUT PILE CAP

1 : 150 0 2 4 6 8m

ISSUED FOR USE
NOT FOR CONSTRUCTION

REVISIONS

REV	BY	DATE	DESCRIPTION	CKD	APP
0	SK	18/12/12	ISSUED FOR USE	RA	RB

DRAWN	SYAM	18/12/12
DRAFTING CHECK	V RAMESH	18/12/12
ENG. APPROVED	V V RAMAYYA	18/12/12
PROJECT MANAGER	RICHARD BROMILOW	18/12/12
RPEQ APPROVAL SIGNED: RUPESH ABBEY NAME: RUPESH ABBEY RPEQ No: 09126		18/12/12

Calibre Operations Pty. Ltd.
Ground Floor, 545 Queen St
Brisbane QLD 4000
Australia
Tel: +61 (0)7 3001 6000
Fax: +61 (0)7 3001 6050

Aarvee Associates Pty. Ltd.
Suite 39, Level 22, 69 Ann St
Brisbane QLD 4000
Australia
Tel: +61 (0)7 3112 5297
Fax: +61 (0)7 3112 5101

THIS DRAWING CONTAINS CONFIDENTIAL INFORMATION TO CALIBRE OPERATIONS PTY. LTD. & ITS AFFILIATED PARTIES. THE CLIENT HAS THE RIGHT TO USE THE INFORMATION CONTAINED IN THIS DRAWING PURSUANT TO CONTRACT BETWEEN CLIENT AND CALIBRE OPERATIONS PTY. LTD.

ORIGINAL SIZE A1

CARMICHAEL COAL MINE AND RAIL PROJECT
ADANI CLIENT'S ENGINEER - RAIL
STRUCTURAL - BRIDGE
PLAN AND ELEVATION - BELYANDO RIVER - CH 145.962

MASTER COPY

PROJECT No. CARP12033

DRG No. CARP12033-1000-DWG-S-108 REV 0

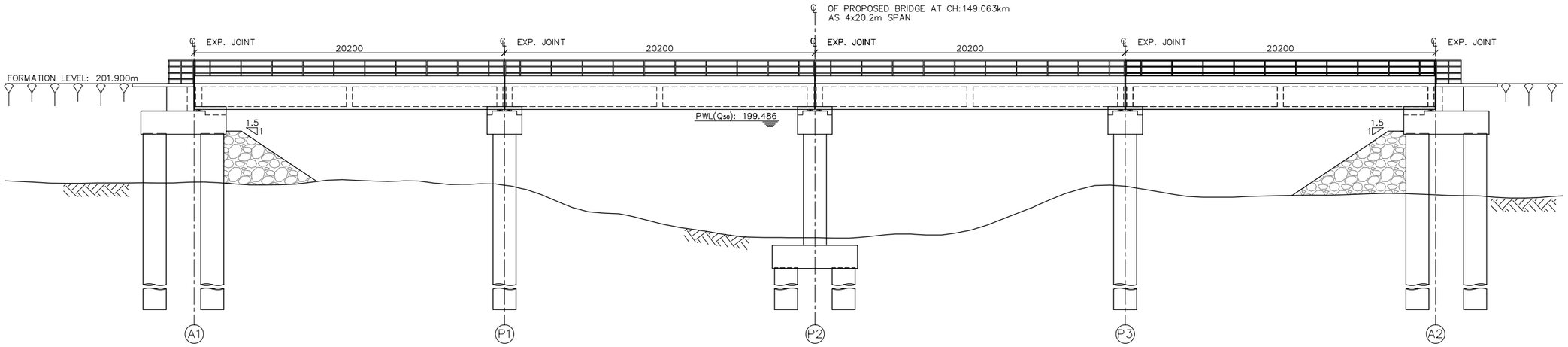

F.L.–S.L. (m)	6.396		6.596		10.003		6.667		7.216	
SURFACE LEVELS (m)	195.504		195.304		191.897		195.233		194.684	
CHAINAGE (km)	149.022	ABUTMENT–1	149.042	PIER–1	149.063	PIER–2	149.083	PIER–3	149.103	ABUTMENT–2

ELEVATION

SCALE 1:150

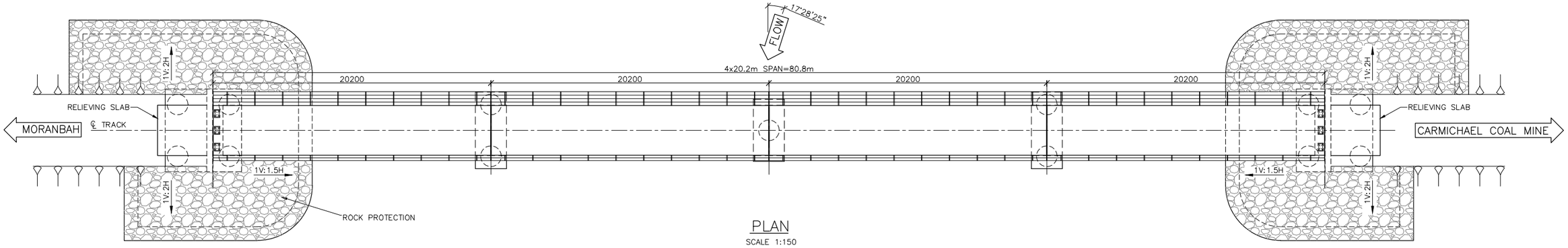

PLAN

SCALE 1:150

GENERAL NOTES:

1. ALL DIMENSIONS ARE IN MILLIMETRES UNLESS NOTED OTHERWISE.
2. CONCRETE GRADE SHALL BE AS FOLLOWS.
   - CAST IN SITU – S40
   - PRECAST – S50
3. CLEAR COVER TO REINFORCEMENT ARE AS FOLLOWS.
   - PILES – 85mm
   - PILE CAP – 90mm
   - PIER COLUMN – 50mm
   - HEAD STOCK – 50mm
4. EXPOSURE CLASSIFICATION B2
5. PILES SHALL BE 1500mm DIAMETER BORED PILES. STEEL LINERS TO BE USED AS PER SITE REQUIREMENT (TEMPORARY STEEL LINER MAY BE USED UP TO 11m DEPTH SUBJECT TO SITE SPECIFIC GEOTECHNICAL PARAMETERS).
6. ALL REINFORCING BARS SHALL BE D500N IN ACCORDANCE WITH AS/NZS 4671:2001
7. MAXIMUM ULTIMATE DESIGN LOAD PER TYPICAL PILE FOR:
   - ABUTMENT A1 – 330T
   - ABUTMENT A2 – 360T
   - PIER (4 PILE GROUP WITH PILE CAP) AT P2 – 370T
   - PIER (2 PILE GROUP WITHOUT PILE CAP) AT P1 & P3 – 573T

REFERENCE DRAWINGS:

CARP12033–1000–DWG–S–031	TYPICAL 19.6m RAIL BRIDGE GIRDER – SHEET 1
CARP12033–1000–DWG–S–032	TYPICAL 19.6m RAIL BRIDGE GIRDER – SHEET 2
CARP12033–1000–DWG–S–040	TYPICAL SCOUR PROTECTION DETAILS
CARP12033–1000–DWG–S–028	TYPICAL DETAILS OF CAST IN PLACE BORED PILE
CARP12033–1000–DWG–S–023	TYPICAL ABUTMENT – 4 PILE GROUP – WITHOUT PILE CAP
CARP12033–1000–DWG–S–026	TYPICAL PIER – 2 PILE GROUP – WITHOUT PILE CAP
CARP12033–1000–DWG–S–027	TYPICAL PIER – 4 PILE GROUP – WITH PILE CAP

1 : 150 0 2 4 6 8m

ISSUED FOR USE
NOT FOR CONSTRUCTION

REVISIONS

REV	BY	DATE	DESCRIPTION	CKD	APP
0	SK	18/12/12	ISSUED FOR USE	RA	RB

DRAWN	SYAM	18/12/12
DRAFTING CHECK	V RAMESH	18/12/12
ENG. APPROVED	V V RAMAYYA	18/12/12
PROJECT MANAGER	RICHARD BROMILOW	18/12/12
RPEQ APPROVAL SIGNED:	RUPESH ABBEY	18/12/12
NAME:	RUPESH ABBEY	
RPEQ No:	09126	

calibre
Calibre Operations Pty. Ltd.
Ground Floor, 545 Queen St
Brisbane QLD 4000
Australia
Tel: +61 (0)7 3001 6000
Fax: +61 (0)7 3001 6050

aarvee associates
Aarvee Associates Pty. Ltd.
Suite 39, Level 22, 69 Ann St
Brisbane QLD 4000
Australia
Tel: +61 (0)7 3112 5297
Fax: +61 (0)7 3112 5101

adani™
THIS DRAWING CONTAINS CONFIDENTIAL INFORMATION TO CALIBRE OPERATIONS PTY. LTD. & ITS AFFILIATED PARTIES. THE CLIENT HAS THE RIGHT TO USE THE INFORMATION CONTAINED IN THIS DRAWING PURSUANT TO CONTRACT BETWEEN CLIENT AND CALIBRE OPERATIONS PTY. LTD.

ORIGINAL SIZE A1

CARMICHAEL COAL MINE AND RAIL PROJECT
ADANI CLIENT'S ENGINEER - RAIL
STRUCTURAL - BRIDGE
PLAN AND ELEVATION - BELYANDO RIVER - CH 149.063

MASTER COPY

PROJECT No. CARP12033

DRG No. CARP12033-1000-DWG-S-109

REV 0

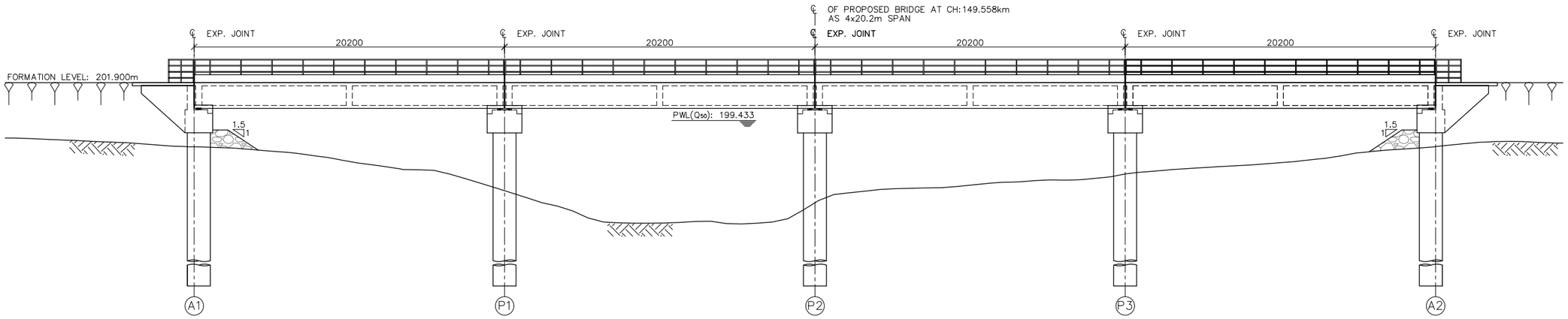

F.L.–S.L. (m)	4.181	7.039	7.832	5.953	4.167
SURFACE LEVELS (m)	197.719	194.861	194.068	195.947	197.733
CHAINAGE (km)	149.517 ABUTMENT–1	149.537 PIER–1	149.558 PIER–2	149.578 PIER–3	149.598 ABUTMENT–2

ELEVATION

SCALE 1:150

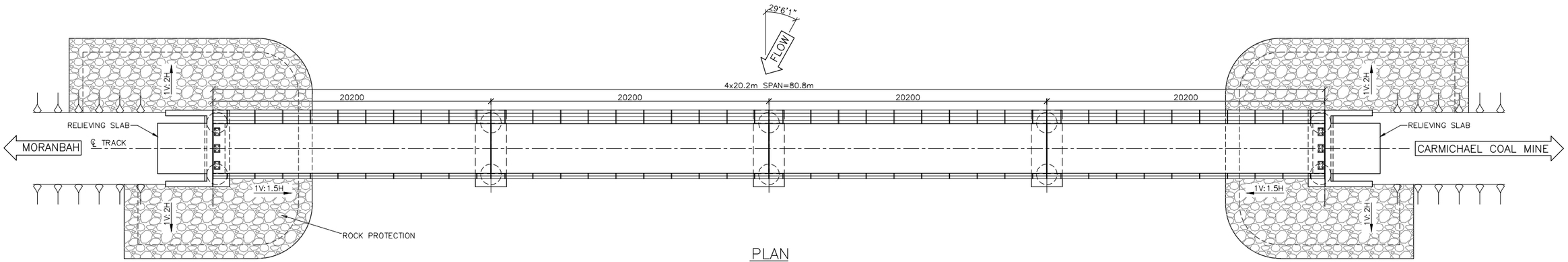

PLAN

SCALE 1:150

GENERAL NOTES:

1. ALL DIMENSIONS ARE IN MILLIMETRES UNLESS NOTED OTHERWISE.
2. CONCRETE GRADE SHALL BE AS FOLLOWS.
   CAST IN SITU – S40
   PRECAST – S50
3. CLEAR COVER TO REINFORCEMENT ARE AS FOLLOWS.
   PILES – 85mm
   HEAD STOCK – 90mm
4. EXPOSURE CLASSIFICATION B2
5. PILES SHALL BE 1500mm DIAMETER BORED PILES. STEEL LINERS TO BE USED AS PER SITE REQUIREMENT (TEMPORARY STEEL LINER MAY BE USED UP TO 11m DEPTH SUBJECT TO SITE SPECIFIC GEOTECHNICAL PARAMETERS).
6. ALL REINFORCING BARS SHALL BE D500N IN ACCORDANCE WITH AS/NZS 4671:2001
7. MAXIMUM ULTIMATE DESIGN LOAD PER TYPICAL PILE FOR:
   ABUTMENT A1 & A2 – 360T
   PIER (2 PILE GROUP WITHOUT PILE CAP) AT P1 & P3 – 573T
   PIER (2 PILE GROUP WITHOUT PILE CAP) AT P2 – 580T

REFERENCE DRAWINGS:

CARP12033–1000–DWG–S–031	TYPICAL 19.6m RAIL BRIDGE GIRDER – SHEET 1
CARP12033–1000–DWG–S–032	TYPICAL 19.6m RAIL BRIDGE GIRDER – SHEET 2
CARP12033–1000–DWG–S–040	TYPICAL SCOUR PROTECTION DETAILS
CARP12033–1000–DWG–S–028	TYPICAL DETAILS OF CAST IN PLACE BORED PILE
CARP12033–1000–DWG–S–024	TYPICAL ABUTMENT – 2 PILE GROUP – WITHOUT PILE CAP
CARP12033–1000–DWG–S–026	TYPICAL PIER – 2 PILE GROUP – WITHOUT PILE CAP

1 : 150 0 2 4 6 8m

ISSUED FOR USE
NOT FOR CONSTRUCTION

REVISIONS

REV	BY	DATE	DESCRIPTION	CKD	APP
0	SK	18/12/12	ISSUED FOR USE	RA	RB

DRAWN	SYAM	18/12/12
DRAFTING CHECK	V RAMESH	18/12/12
ENG. APPROVED	V V RAMAYYA	18/12/12
PROJECT MANAGER	RICHARD BROMILOW	18/12/12
RPEQ APPROVAL SIGNED: RUPESH ABBEY NAME: RUPESH ABBEY RPEQ No: 09126		18/12/12

calibre
Calibre Operations Pty. Ltd.
Ground Floor, 545 Queen St
Brisbane QLD 4000
Australia
Tel: +61 (0)7 3001 6000
Fax: +61 (0)7 3001 6050

aarvee associates
Aarvee Associates Pty. Ltd.
Suite 39, Level 22, 69 Ann St
Brisbane QLD 4000
Australia
Tel: +61 (0)7 3112 5297
Fax: +61 (0)7 3112 5101

adani™

THIS DRAWING CONTAINS CONFIDENTIAL INFORMATION TO CALIBRE OPERATIONS PTY. LTD. & ITS AFFILIATED PARTIES. THE CLIENT HAS THE RIGHT TO USE THE INFORMATION CONTAINED IN THIS DRAWING PURSUANT TO CONTRACT BETWEEN CLIENT AND CALIBRE OPERATIONS PTY. LTD.

ORIGINAL SIZE A1

CARMICHAEL COAL MINE AND RAIL PROJECT
ADANI CLIENT'S ENGINEER - RAIL
STRUCTURAL - BRIDGE
PLAN AND ELEVATION - BELYANDO RIVER - CH 149.558

MASTER COPY

PROJECT No. CARP12033

DRG No. CARP12033-1000-DWG-S-110 REV 0

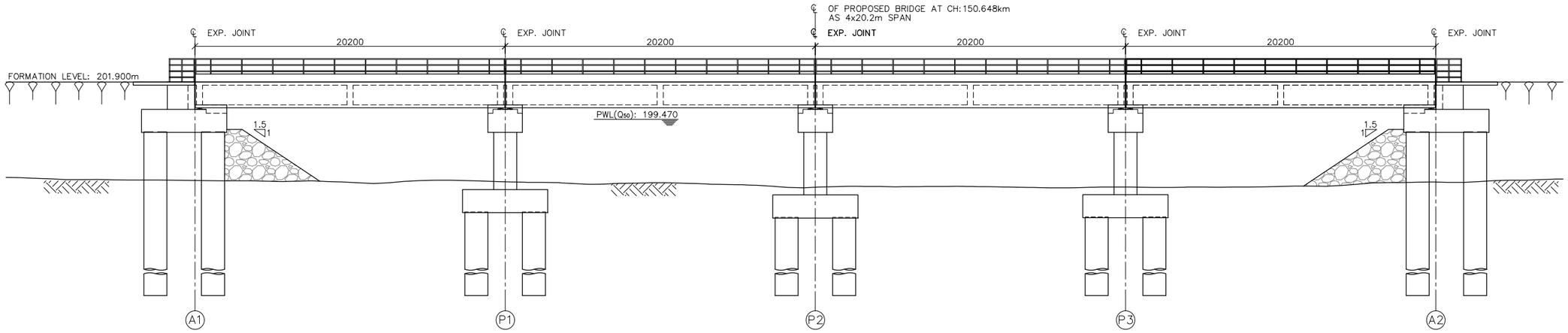

	A1	P1	P2	P3	A2
F.L.–S.L. (m)	6.409	6.492	6.845	6.827	6.509
SURFACE LEVELS (m)	195.491	195.408	195.055	195.073	195.391
CHAINAGE (km)	150.607 ABUTMENT–1	150.627 PIER–1	150.648 PIER–2	150.668 PIER–3	150.688 ABUTMENT–2

ELEVATION

SCALE 1:150

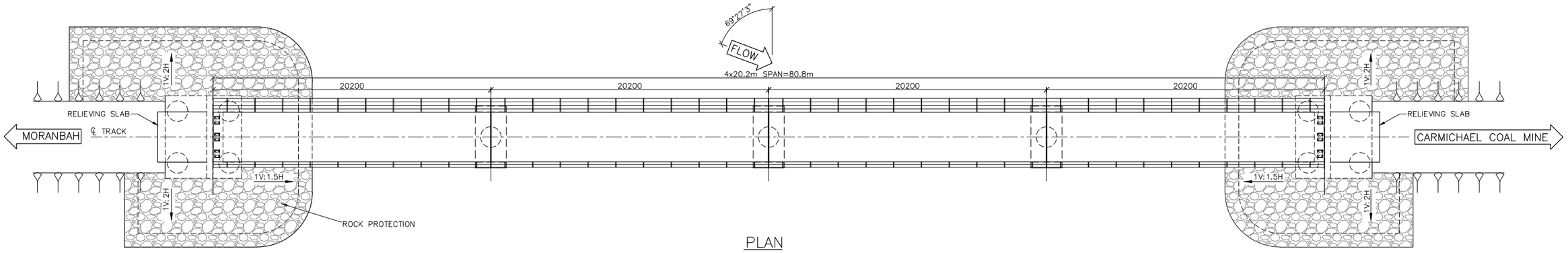

PLAN

SCALE 1:150

GENERAL NOTES:

1. ALL DIMENSIONS ARE IN MILLIMETRES UNLESS NOTED OTHERWISE.
2. CONCRETE GRADE SHALL BE AS FOLLOWS.
   - CAST IN SITU – S40
   - PRECAST – S50
3. CLEAR COVER TO REINFORCEMENT ARE AS FOLLOWS.
   - PILES – 85mm
   - PILE CAP – 90mm
   - PIER COLUMN – 50mm
   - HEAD STOCK – 50mm
4. EXPOSURE CLASSIFICATION B2
5. PILES SHALL BE 1500mm DIAMETER BORED PILES. STEEL LINERS TO BE USED AS PER SITE REQUIREMENT (TEMPORARY STEEL LINER MAY BE USED UP TO 3m DEPTH).
6. ALL REINFORCING BARS SHALL BE D500N IN ACCORDANCE WITH AS/NZS 4671:2001
7. MAXIMUM ULTIMATE DESIGN LOAD PER TYPICAL PILE FOR:
   ABUTMENT A1 & A2 – 330T
   PIER (4 PILE GROUP WITH PILE CAP) AT ALL LOCATIONS – 350T

REFERENCE DRAWINGS:

CARP12033–1000–DWG–S–031	TYPICAL 19.6m RAIL BRIDGE GIRDER – SHEET 1
CARP12033–1000–DWG–S–032	TYPICAL 19.6m RAIL BRIDGE GIRDER – SHEET 2
CARP12033–1000–DWG–S–040	TYPICAL SCOUR PROTECTION DETAILS
CARP12033–1000–DWG–S–028	TYPICAL DETAILS OF CAST IN PLACE BORED PILE
CARP12033–1000–DWG–S–023	TYPICAL ABUTMENT – 4 PILE GROUP – WITHOUT PILE CAP
CARP12033–1000–DWG–S–027	TYPICAL PIER – 4 PILE GROUP – WITH PILE CAP

1 : 150 0 2 4 6 8m

ISSUED FOR USE
NOT FOR CONSTRUCTION

REVISIONS

REV	BY	DATE	DESCRIPTION	CKD	APP
0	SK	18/12/12	ISSUED FOR USE	RA	RB

DRAWN	SYAM	18/12/12
DRAFTING CHECK	V RAMESH	18/12/12
ENG. APPROVED	P V S SARMA	18/12/12
PROJECT MANAGER	RICHARD BROMILOW	18/12/12
RPEQ APPROVAL SIGNED:	RUPESH ABBEY	18/12/12
NAME:	RUPESH ABBEY	
RPEQ No:	09126	

calibre
Calibre Operations Pty. Ltd.
Ground Floor, 545 Queen St
Brisbane QLD 4000
Australia
Tel: +61 (0)7 3001 6000
Fax: +61 (0)7 3001 6050

aarvee associates
Aarvee Associates Pty. Ltd.
Suite 39, Level 22, 69 Ann St
Brisbane QLD 4000
Australia
Tel: +61 (0)7 3112 5297
Fax: +61 (0)7 3112 5101

adani™

THIS DRAWING CONTAINS CONFIDENTIAL INFORMATION TO CALIBRE OPERATIONS PTY. LTD. & ITS AFFILIATED PARTIES. THE CLIENT HAS THE RIGHT TO USE THE INFORMATION CONTAINED IN THIS DRAWING PURSUANT TO CONTRACT BETWEEN CLIENT AND CALIBRE OPERATIONS PTY. LTD.

ORIGINAL SIZE A1

CARMICHAEL COAL MINE AND RAIL PROJECT
ADANI CLIENT'S ENGINEER - RAIL
STRUCTURAL - BRIDGE
PLAN AND ELEVATION - OGENBEENA - CH 150.648

MASTER COPY

PROJECT No. CARP12033

DRG No. CARP12033-1000-DWG-S-111 REV 0